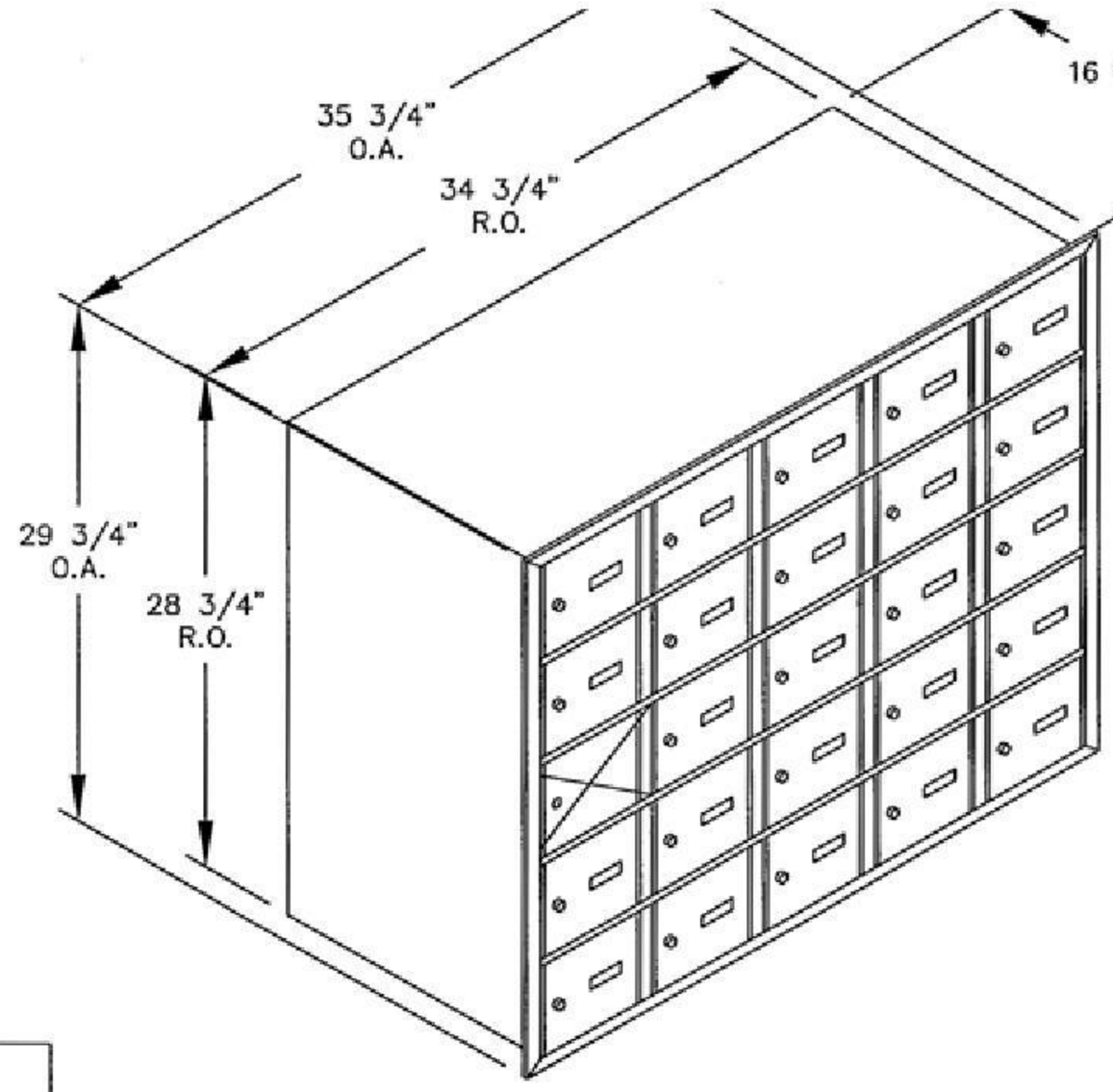

3625FL FRONT LOADING
25 'A' SIZE DOORS (24 USABLE)

MODEL #3625FL

HORIZONTAL MAILBOX–FRONT LOADING

AVAILABLE FOR:
USPS ACCESS OR PRIVATE ACCESS