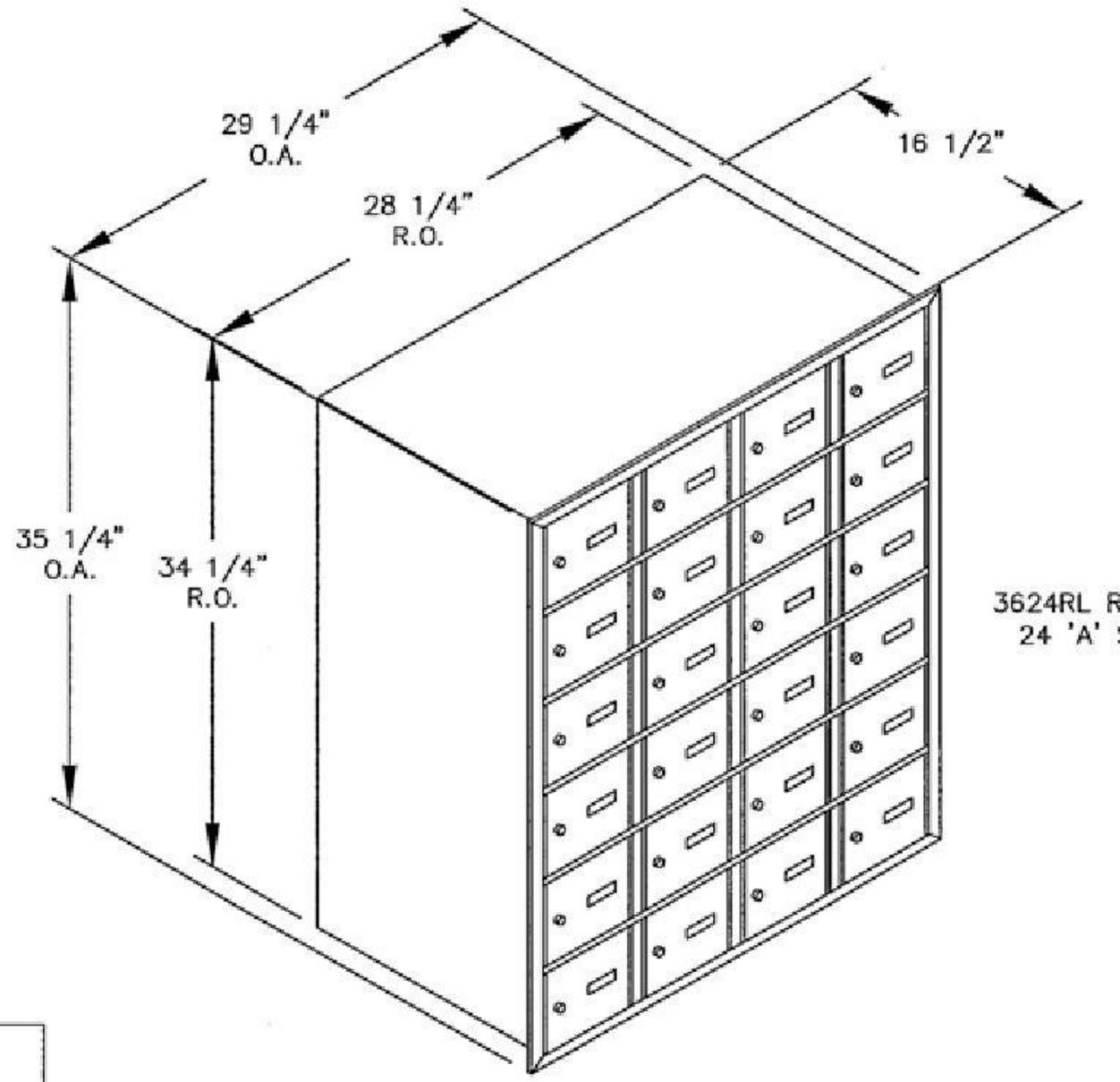

3624RL REAR LOADING
24 'A' SIZE DOORS

MODEL #3624RL

HORIZONTAL MAILBOX–REAR LOADING

AVAILABLE FOR:
USPS ACCESS OR PRIVATE ACCESS