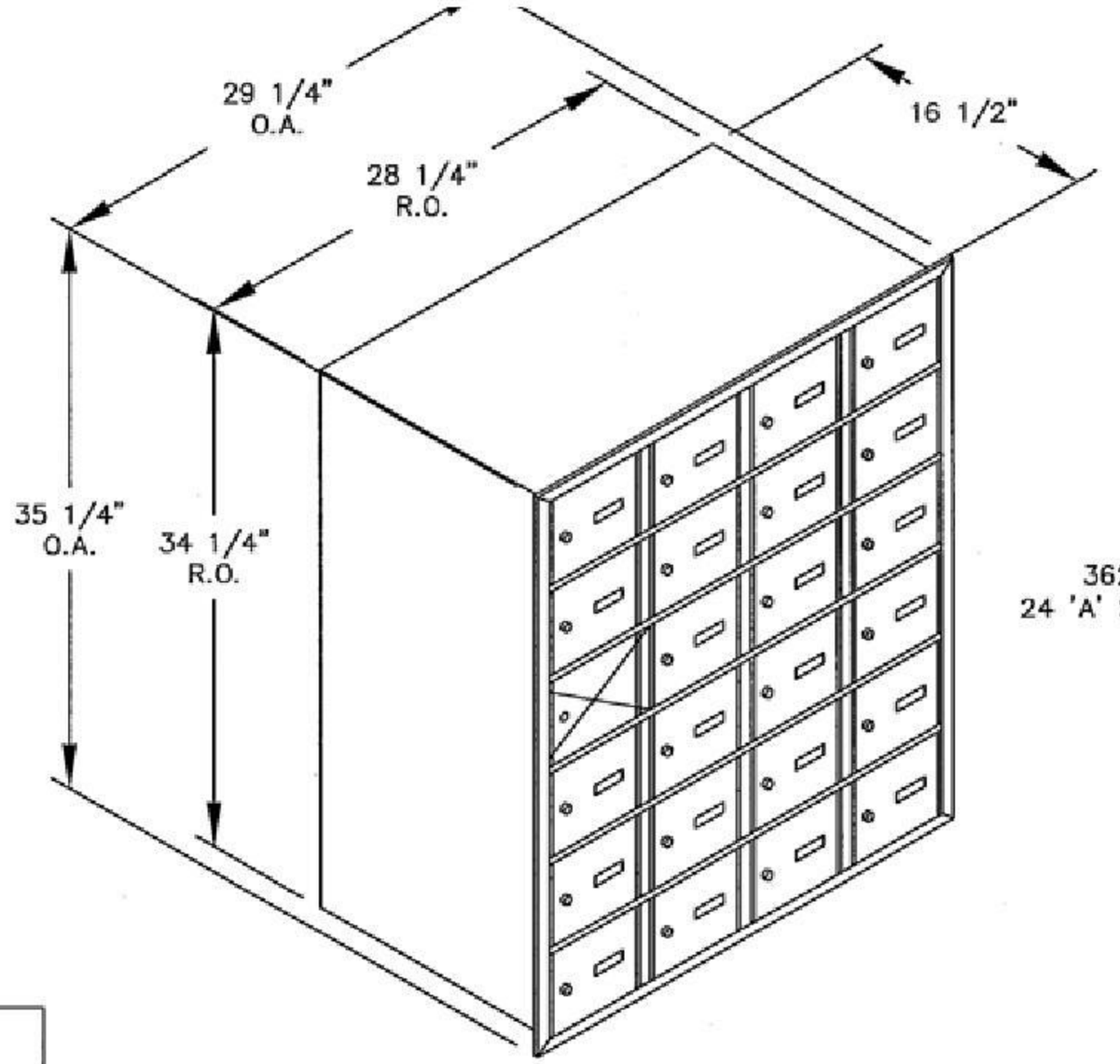

3624FL FRONT LOADING
24 'A' SIZE DOORS (23 USABLE)

MODEL #3624FL

HORIZONTAL MAILBOX–FRONT LOADING

AVAILABLE FOR:
USPS ACCESS OR PRIVATE ACCESS