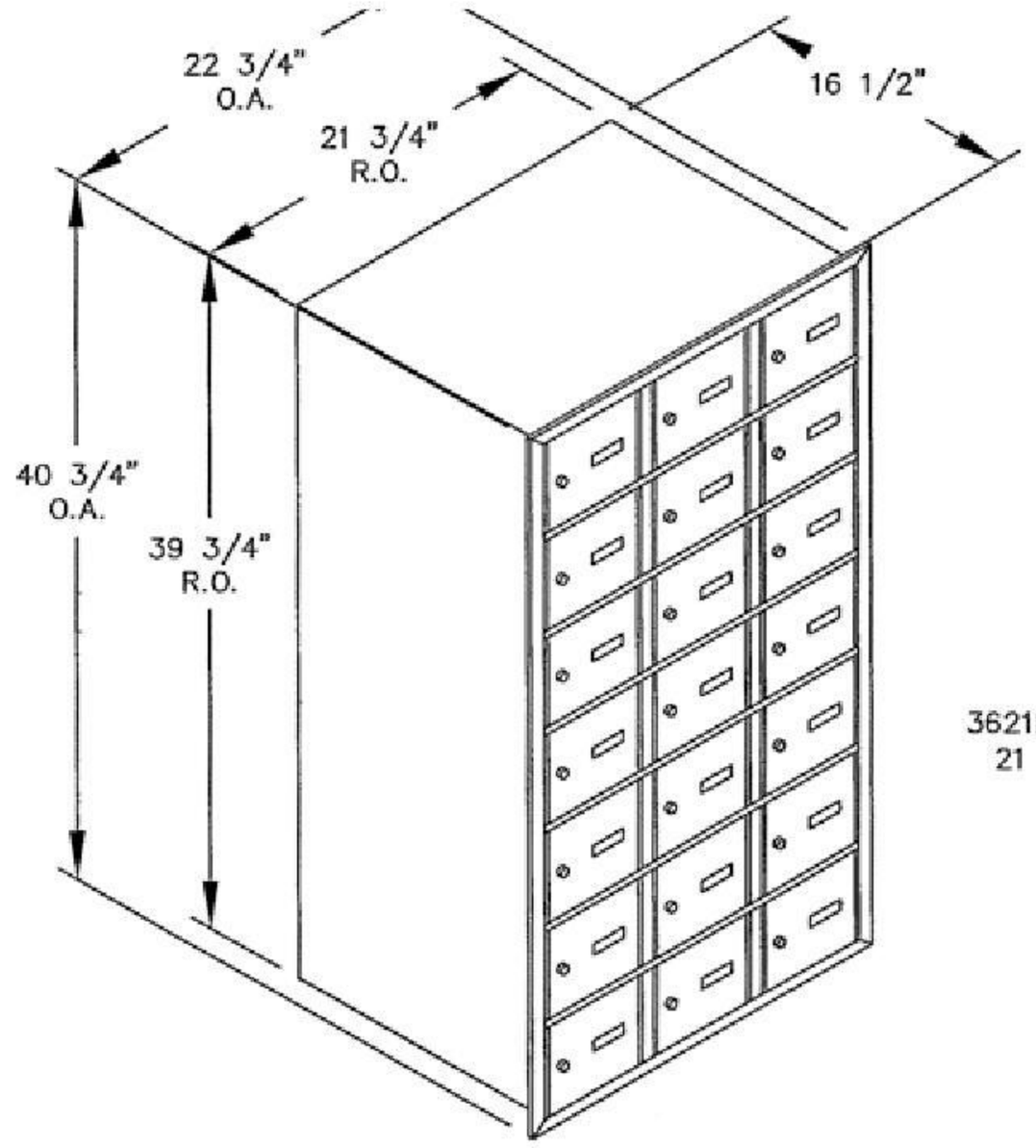

3621RL REAR LOADING
21 'A' SIZE DOORS

MODEL #3621RL

HORIZONTAL MAILBOX–REAR LOADING

AVAILABLE FOR:
USPS ACCESS OR PRIVATE ACCESS