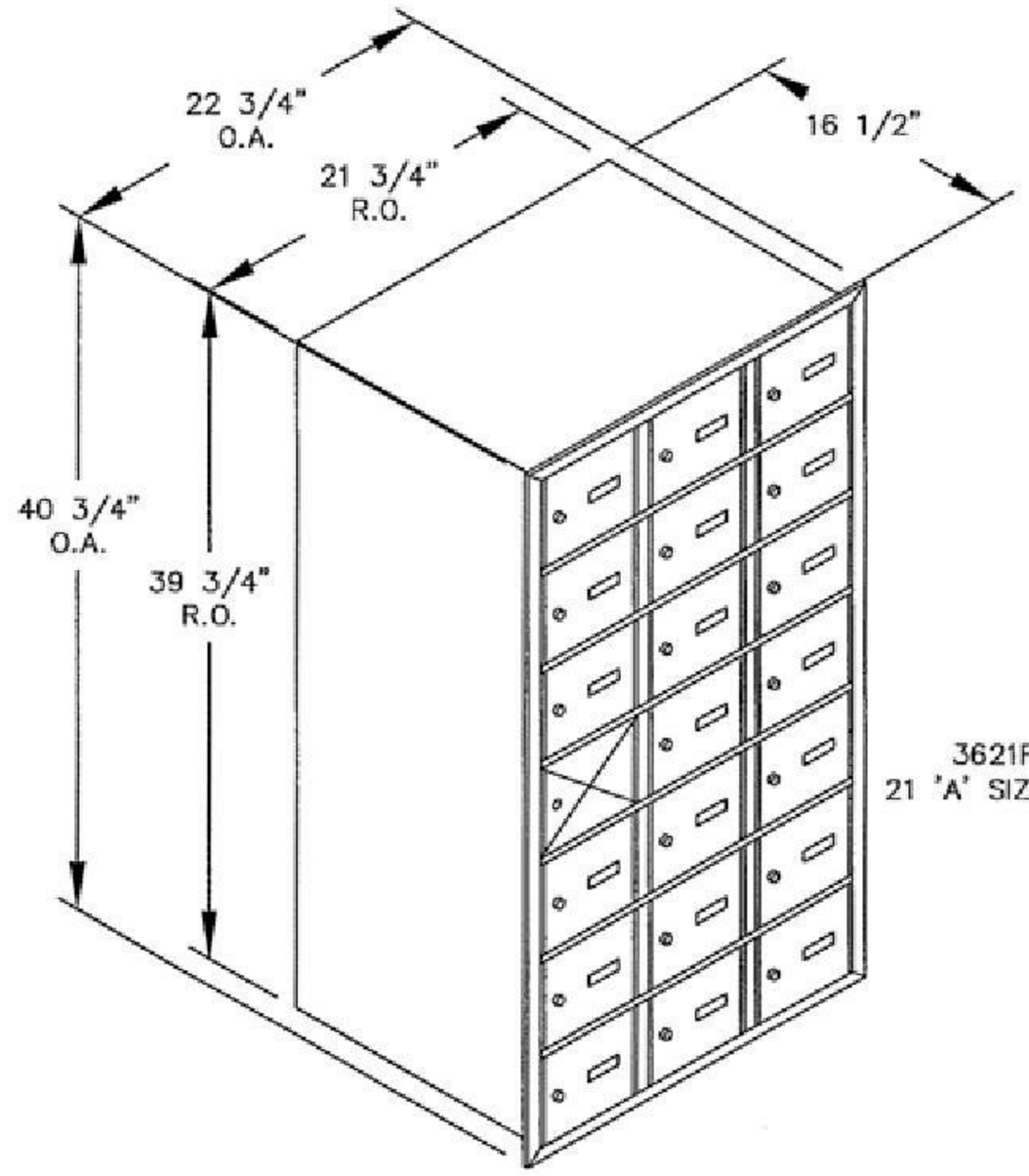

3621FL FRONT LOADING
21 'A' SIZE DOORS (20 USABLE)

MODEL #3621FL

HORIZONTAL MAILBOX–FRONT LOADING

AVAILABLE FOR:
USPS ACCESS OR PRIVATE ACCESS