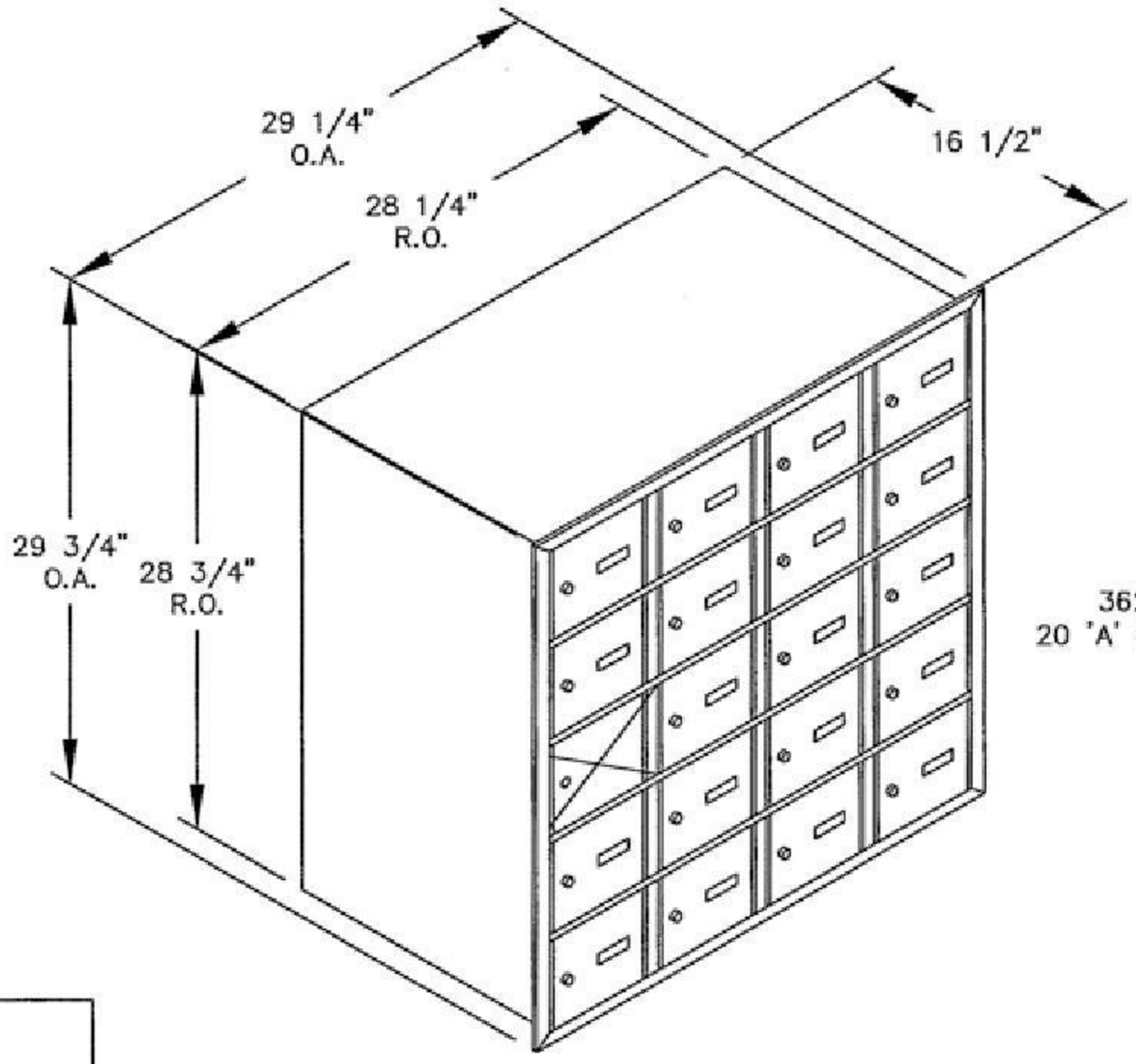

3620FL FRONT LOADING
20 'A' SIZE DOORS (19 USABLE)

MODEL #3620FL

HORIZONTAL MAILBOX–FRONT LOADING

AVAILABLE FOR:
USPS ACCESS OR PRIVATE ACCESS