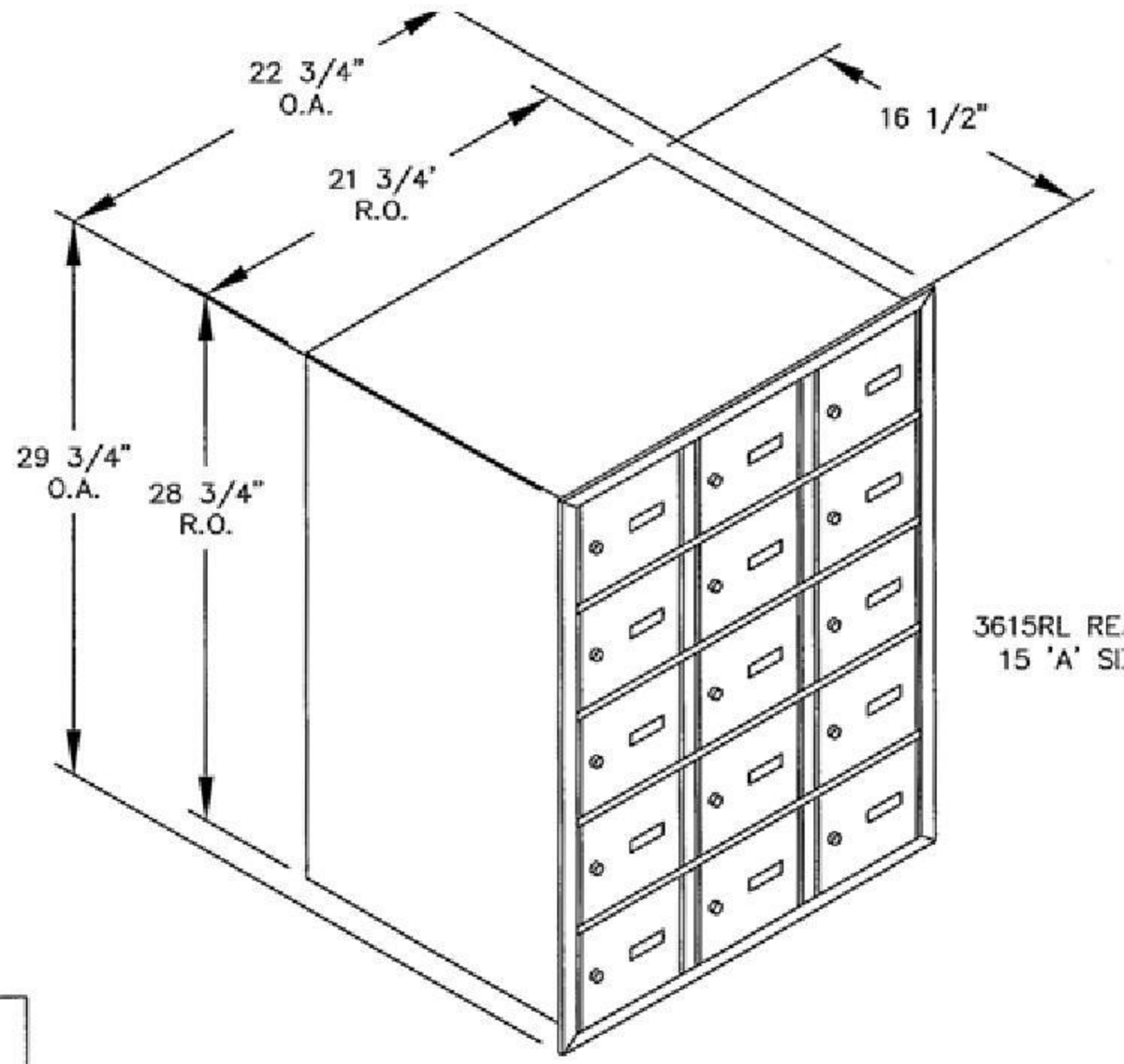

3615RL REAR LOADING
15 'A' SIZE DOORS

MODEL #3615RL

HORIZONTAL MAILBOX–REAR LOADING

AVAILABLE FOR:
USPS ACCESS OR PRIVATE ACCESS