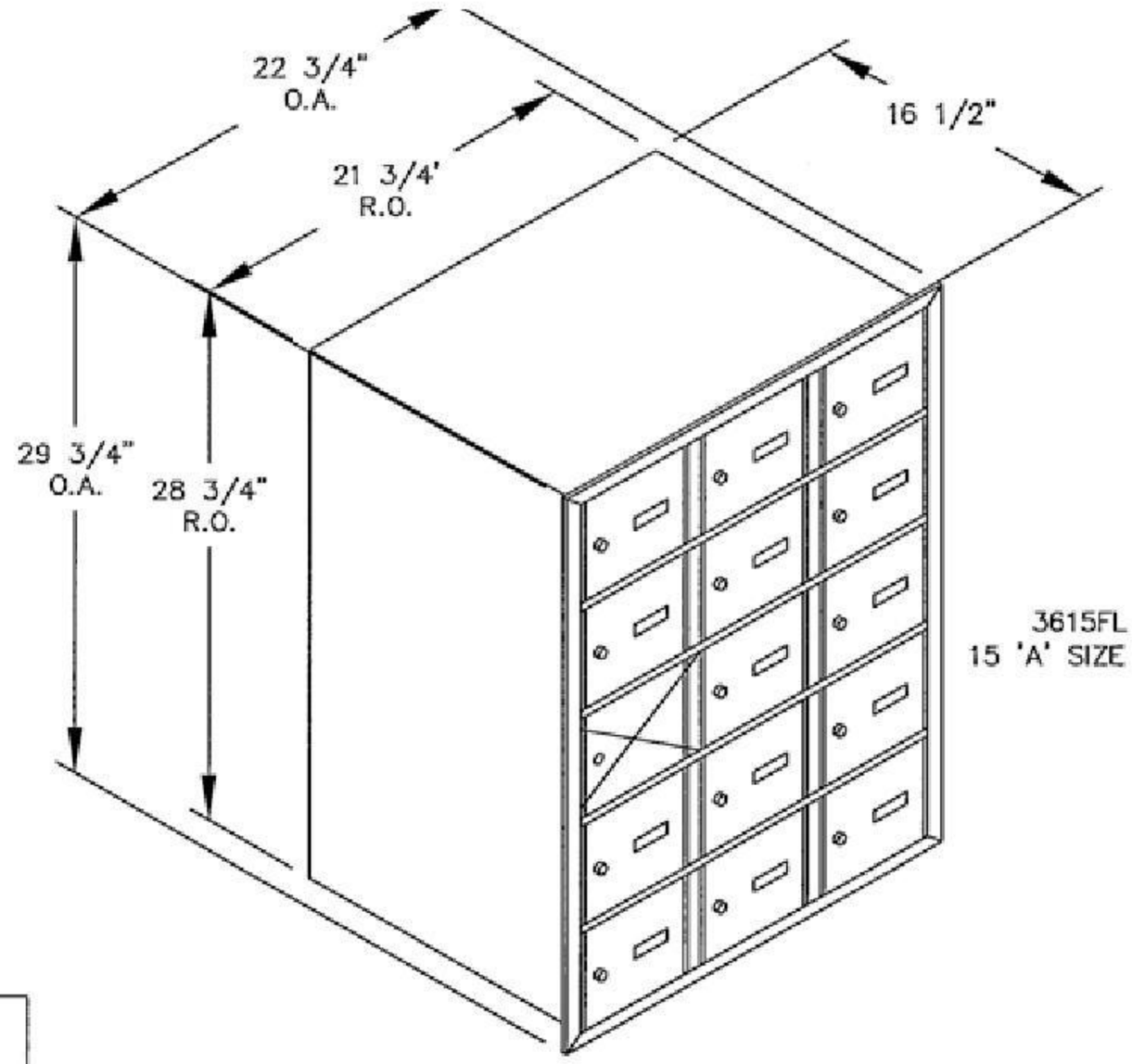

3615FL FRONT LOADING
15 'A' SIZE DOORS (14 USABLE)

MODEL #3615FL

HORIZONTAL MAILBOX–FRONT LOADING

AVAILABLE FOR:
USPS ACCESS OR PRIVATE ACCESS