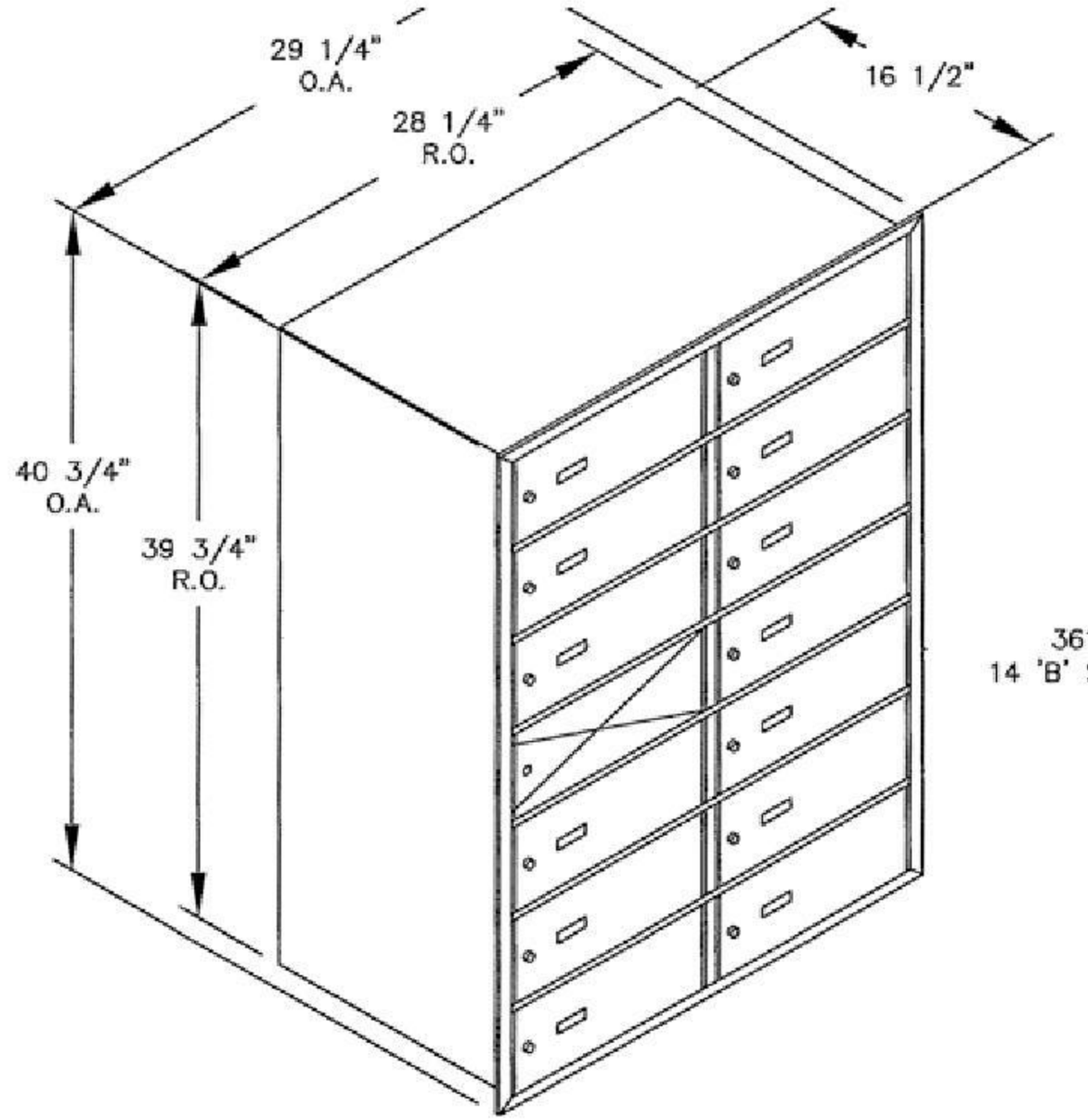

3614FL FRONT LOADING
14 'B' SIZE DOORS (13 USABLE)

MODEL #3614FL

HORIZONTAL MAILBOX–FRONT LOADING

AVAILABLE FOR:
USPS ACCESS OR PRIVATE ACCESS