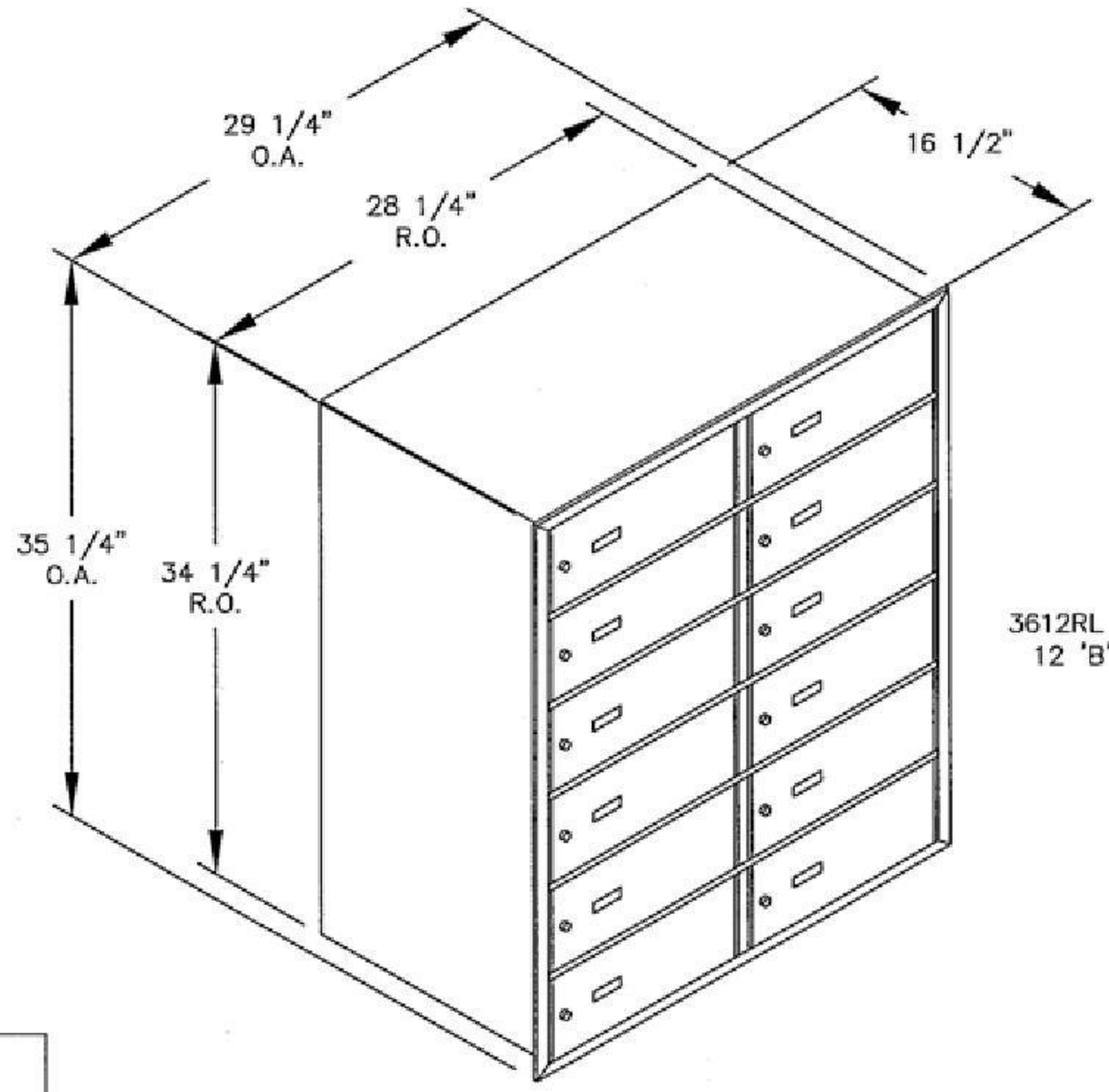

3612RL REAR LOADING
12 'B' SIZE DOORS

MODEL #3612RL

HORIZONTAL MAILBOX–REAR LOADING

AVAILABLE FOR:
USPS ACCESS OR PRIVATE ACCESS