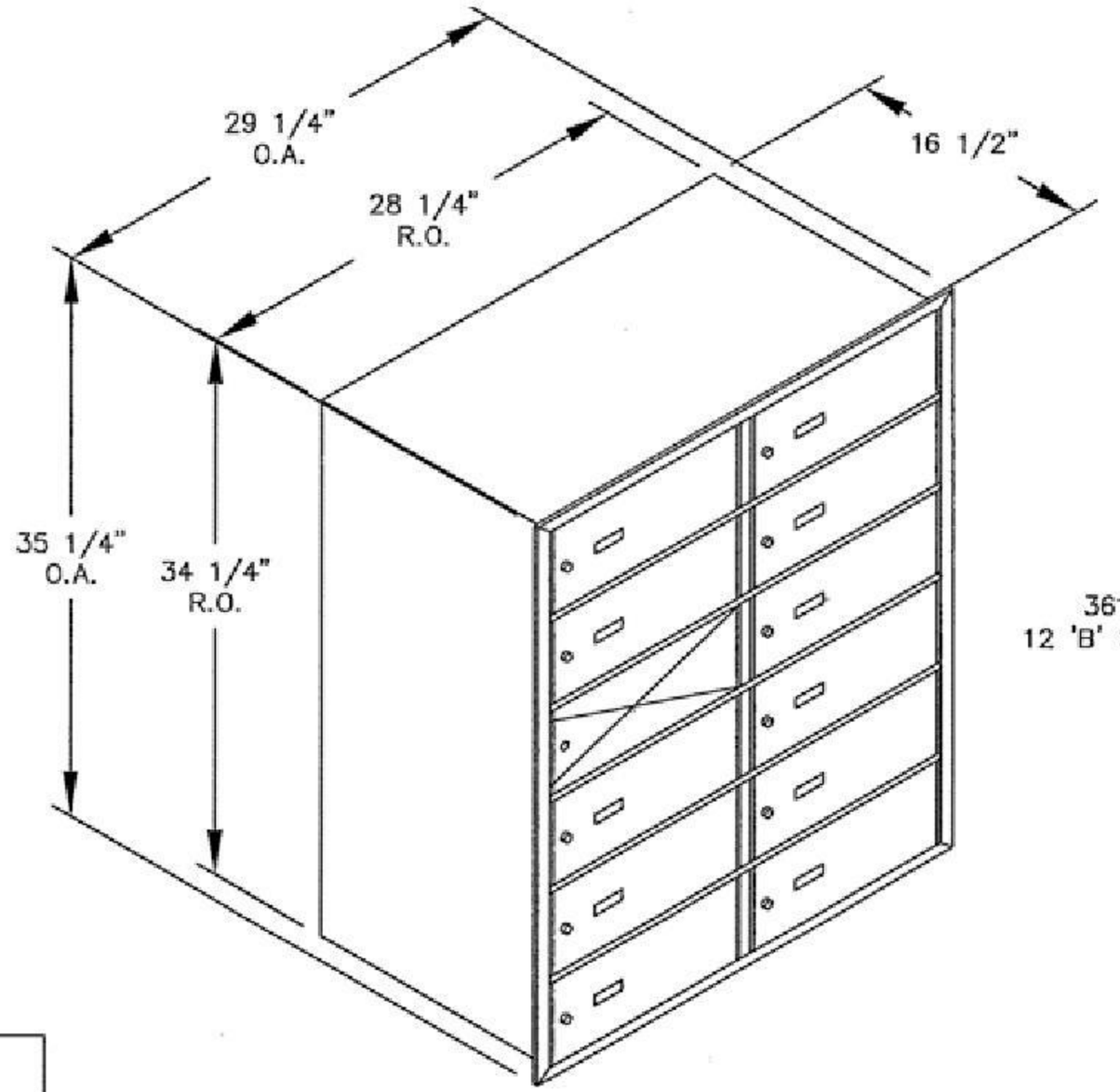

3612FL FRONT LOADING
12 'B' SIZE DOORS (11 USABLE)

MODEL #3612FL

HORIZONTAL MAILBOX–FRONT LOADING

AVAILABLE FOR:
USPS ACCESS OR PRIVATE ACCESS