mailboxes.com
1-800-MAILBOX

Visit us at: www.mailboxes.com

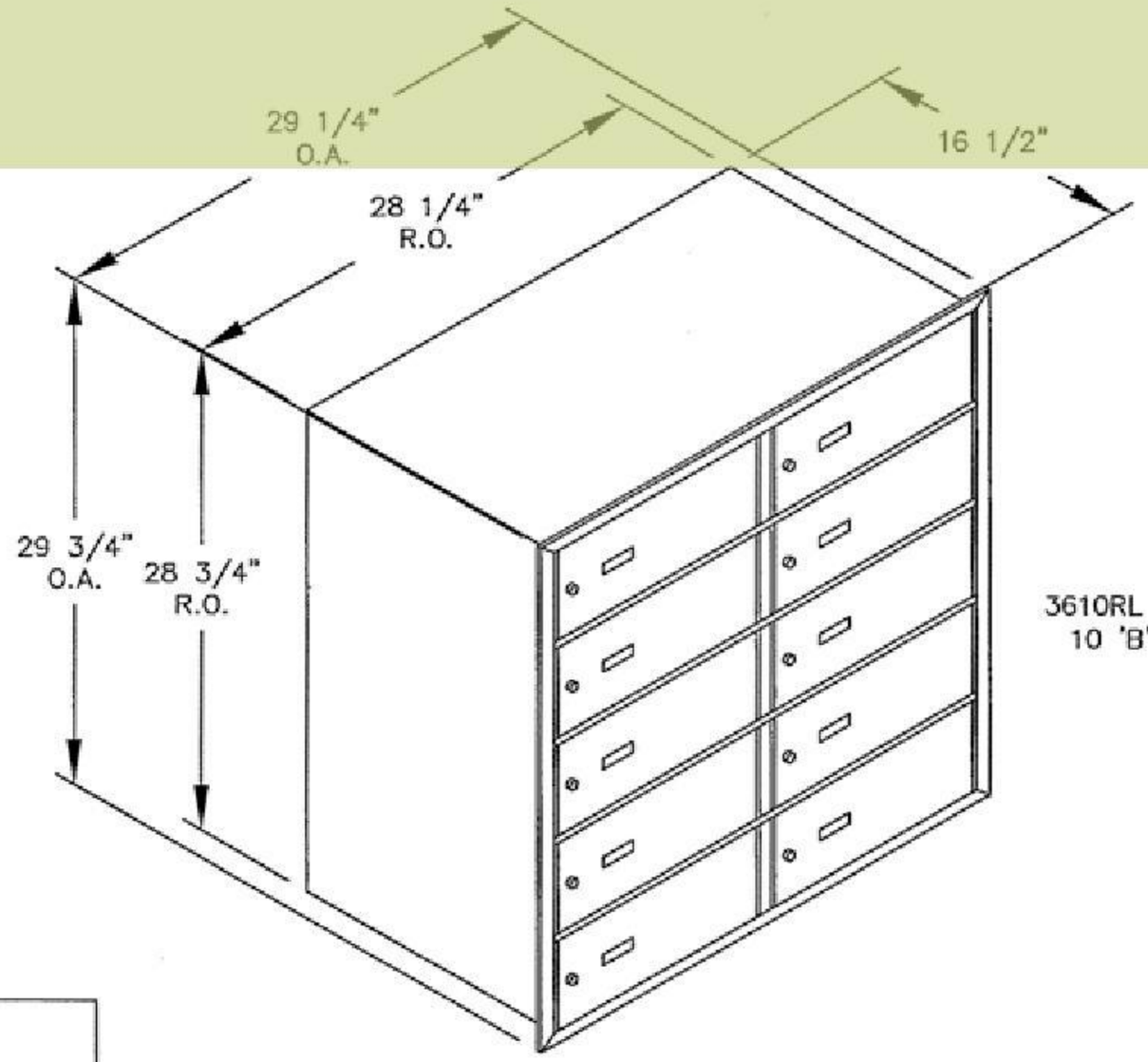

3610RL REAR LOADING
10 'B' SIZE DOORS

MODEL #3610RL
HORIZONTAL MAILBOX–REAR LOADING

AVAILABLE FOR:
USPS ACCESS OR PRIVATE ACCESS

Established in 1936, Salsbury Industries is the industry leader in manufacturing and distributing quality mailboxes.

SALSBURY INDUSTRIES
People Committed to Quality Since 1936®

1010 E. 62ND STREET
LOS ANGELES, CA 90001
PHONE: (800) 624–5269
FAX: (800) 624–5299
email: engineering@mailboxes.com