mailboxes.com
1-800-MAILBOX

Visit us at: www.mailboxes.com

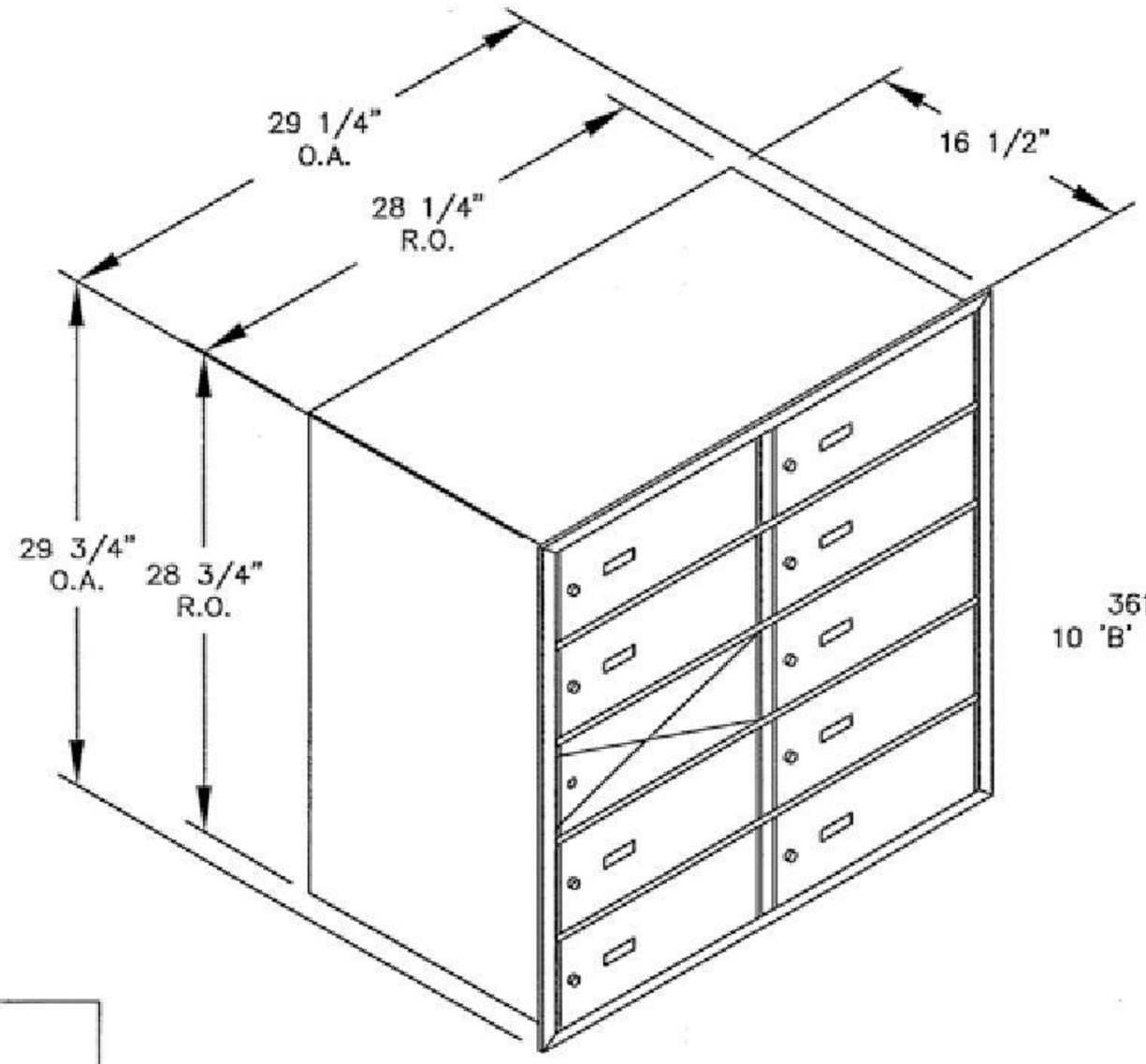

3610FL FRONT LOADING
10 'B' SIZE DOORS (9 USABLE)

MODEL #3610FL
HORIZONTAL MAILBOX–FRONT LOADING

AVAILABLE FOR:
USPS ACCESS OR PRIVATE ACCESS

Established in 1936, Salsbury Industries is the industry leader in manufacturing and distributing quality mailboxes.

SALSBURY INDUSTRIES
People Committed to Quality Since 1936®
1010 E. 62ND STREET
LOS ANGELES, CA 90001
PHONE: (800) 624–5269
FAX: (800) 624–5299
email: engineering@mailboxes.com