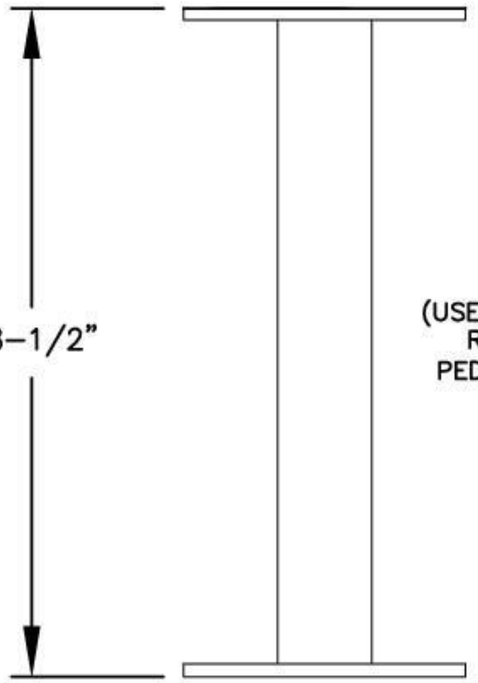

PEDESTAL
(USED IN CONJUNCTION WITH
REGENCY DECORATIVE
PEDESTAL COVER – TALL)

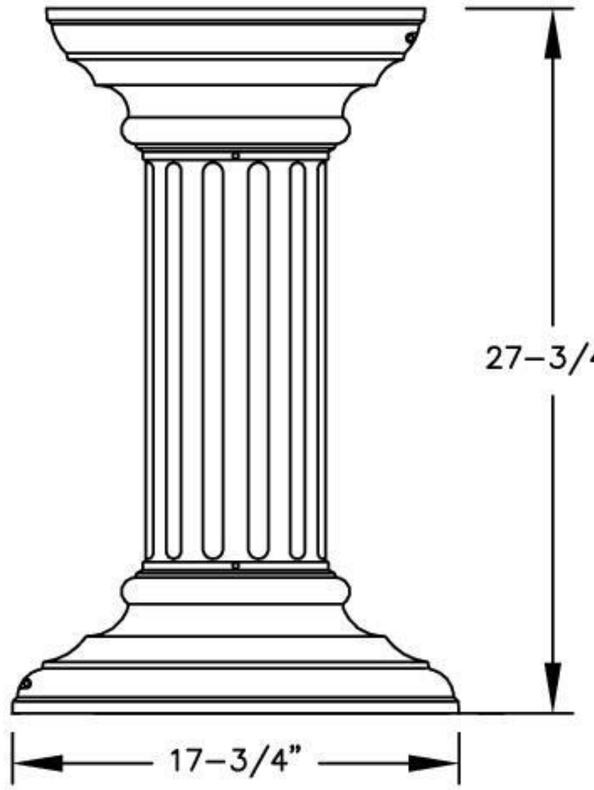

3396
REGENCY DECORATIVE PEDESTAL
COVER – TALL

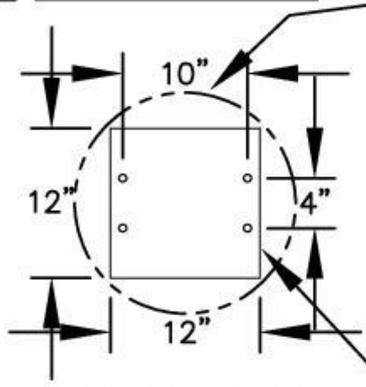

PEDESTAL BASE
BOLT PATTERN

PEDESTAL
(USED IN CONJUNCTION WITH
REGENCY DECORATIVE
PEDESTAL COVER – TALL)

TYPICAL ASSEMBLY:
(See Installation Instructions for more detail)

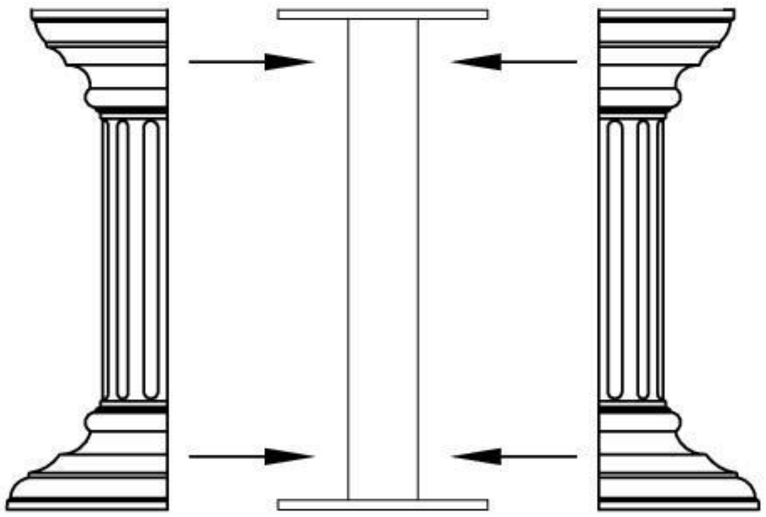

PEDESTAL COVER – TALL #3396

PEDESTAL

MODEL #3396

REGENCY DECORATIVE
PEDESTAL COVER – TALL
(OPTION FOR PEDESTAL FOR
CBU #3308 AND CBU #3312)

AVAILABLE COLORS:
SANDSTONE, BRONZE, GREEN, BLACK OR WHITE

DRAWN: 10/10