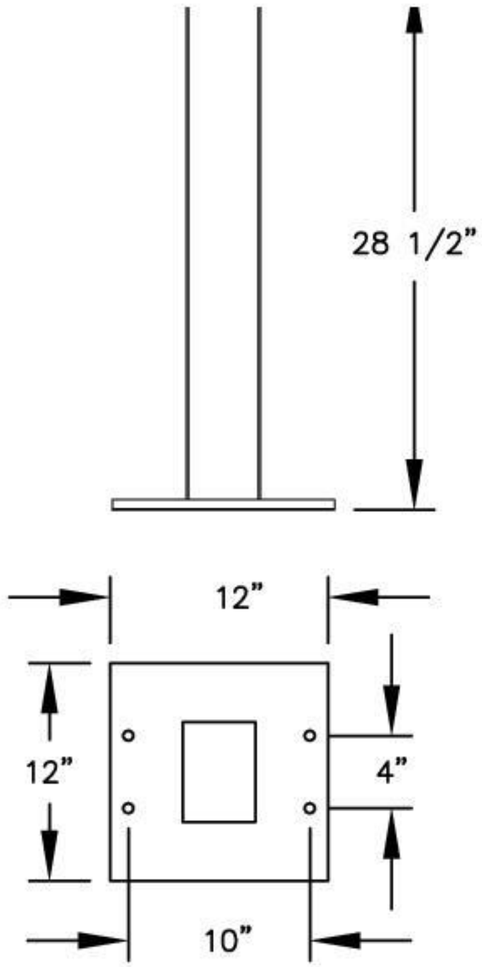

PEDESTAL BASE
BOLT PATTERN

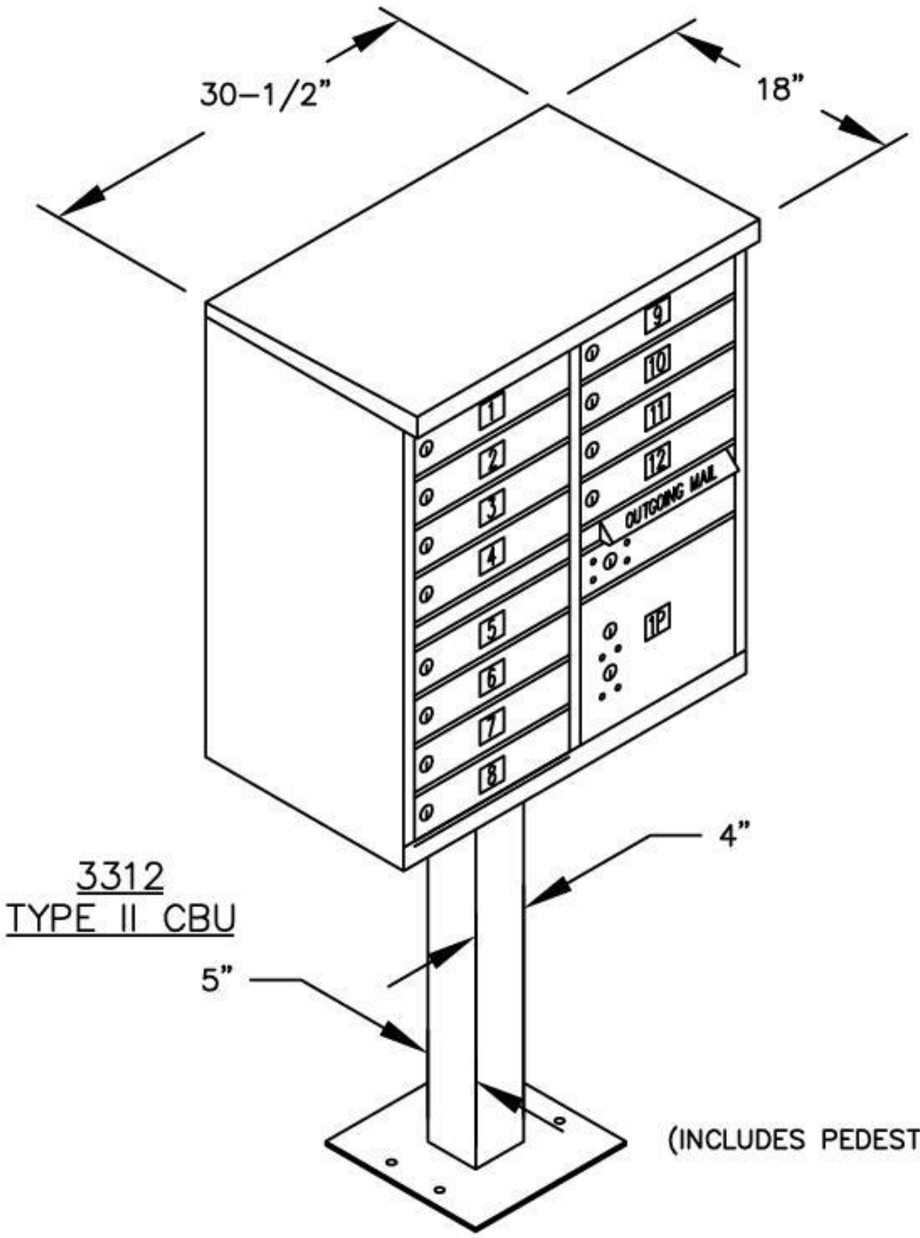

3312
TYPE II CBU

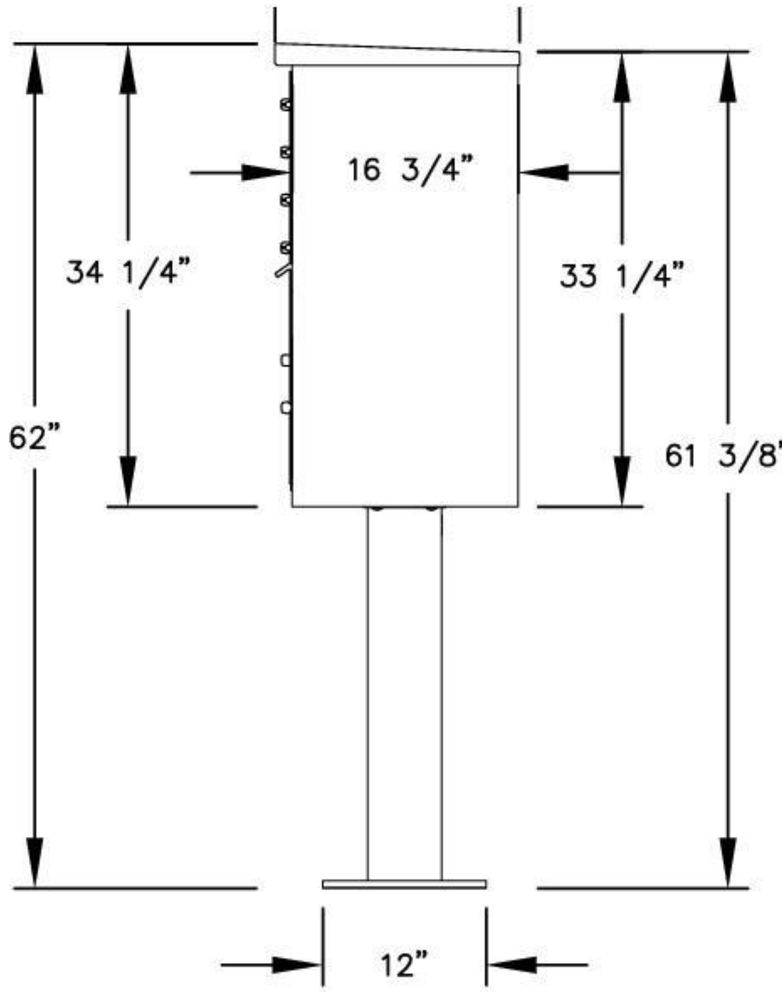

(INCLUDES PEDESTAL)

MODEL #3312

CLUSTER BOX UNIT

(F SERIES)

AVAILABLE COLORS:
SANDSTONE, BRONZE, GREEN, BLACK, WHITE
OR GRAY (FOR REPLACEMENT UNITS)

DRAWN: 10/10