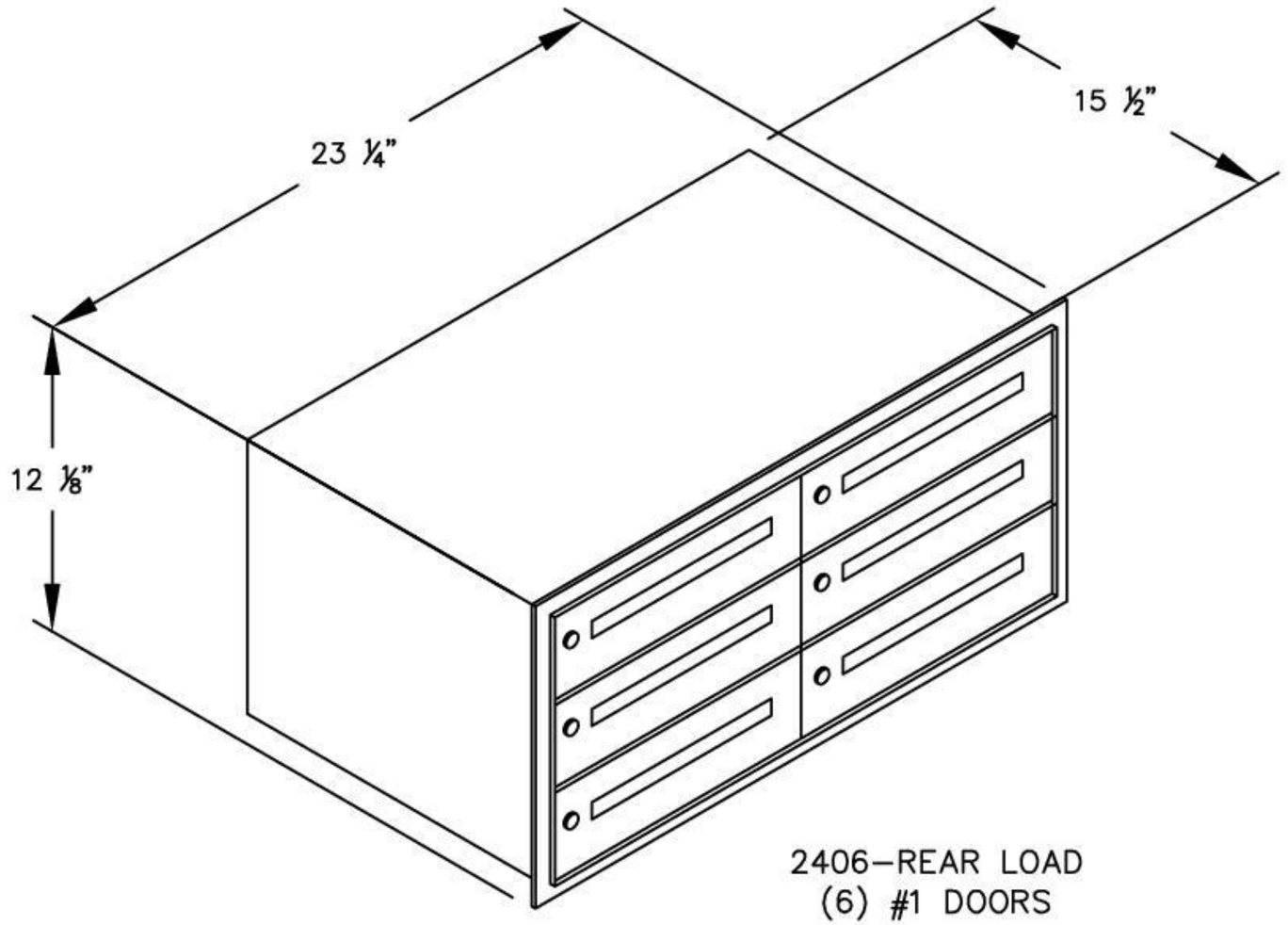

2406–REAR LOAD
(6) #1 DOORS

TYPICAL INSTALLATION:
(See Installation Instructions for more detail)

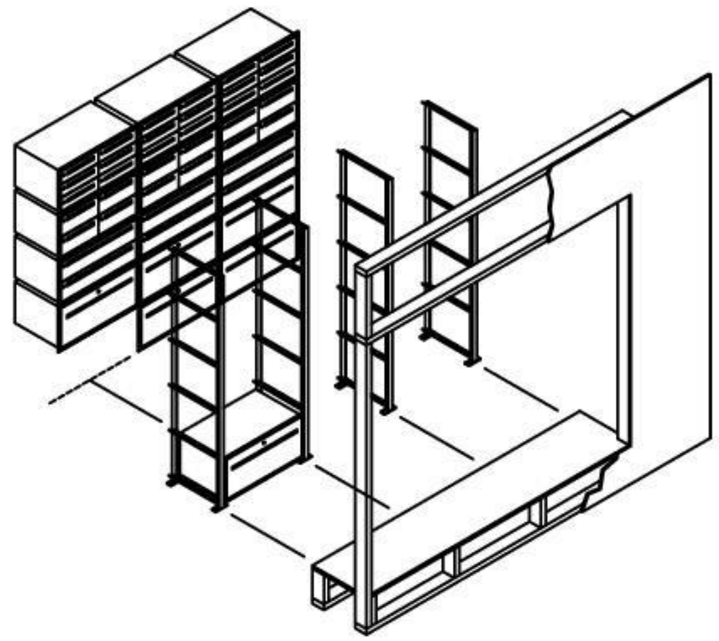

MODEL #2406
DATA DISTRIBUTION
RACK LADDER SYSTEM