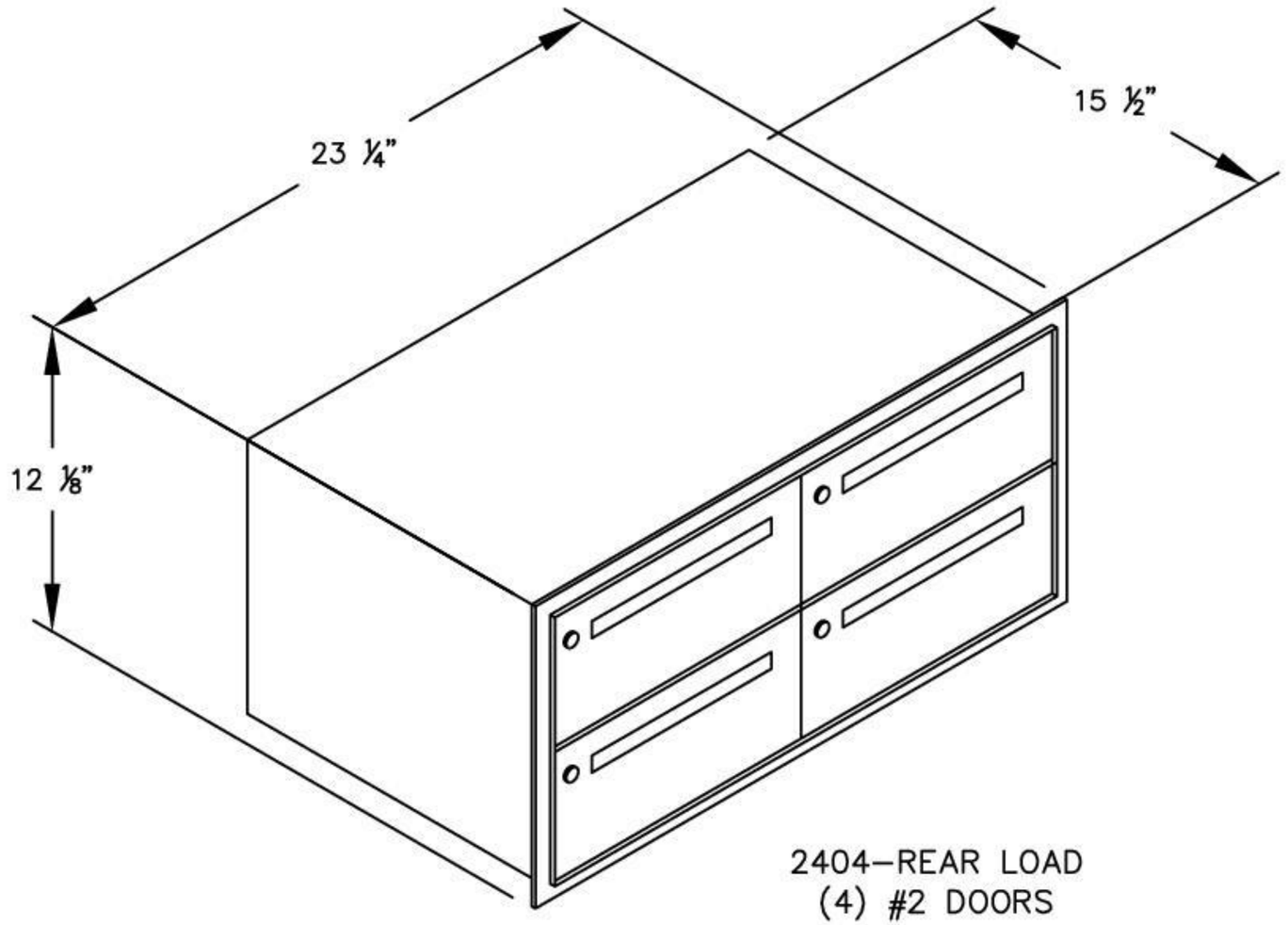

2404–REAR LOAD
(4) #2 DOORS

TYPICAL INSTALLATION:
(See Installation Instructions for more detail)

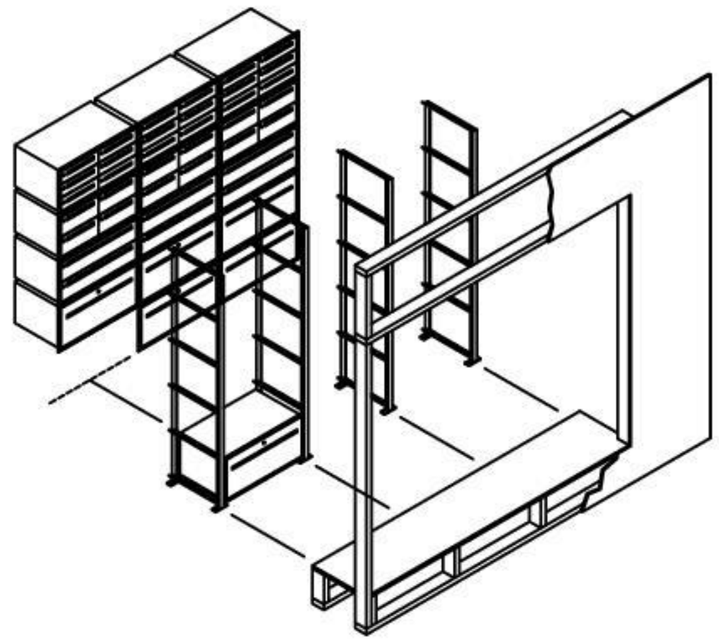

MODEL #2404
DATA DISTRIBUTION
RACK LADDER SYSTEM