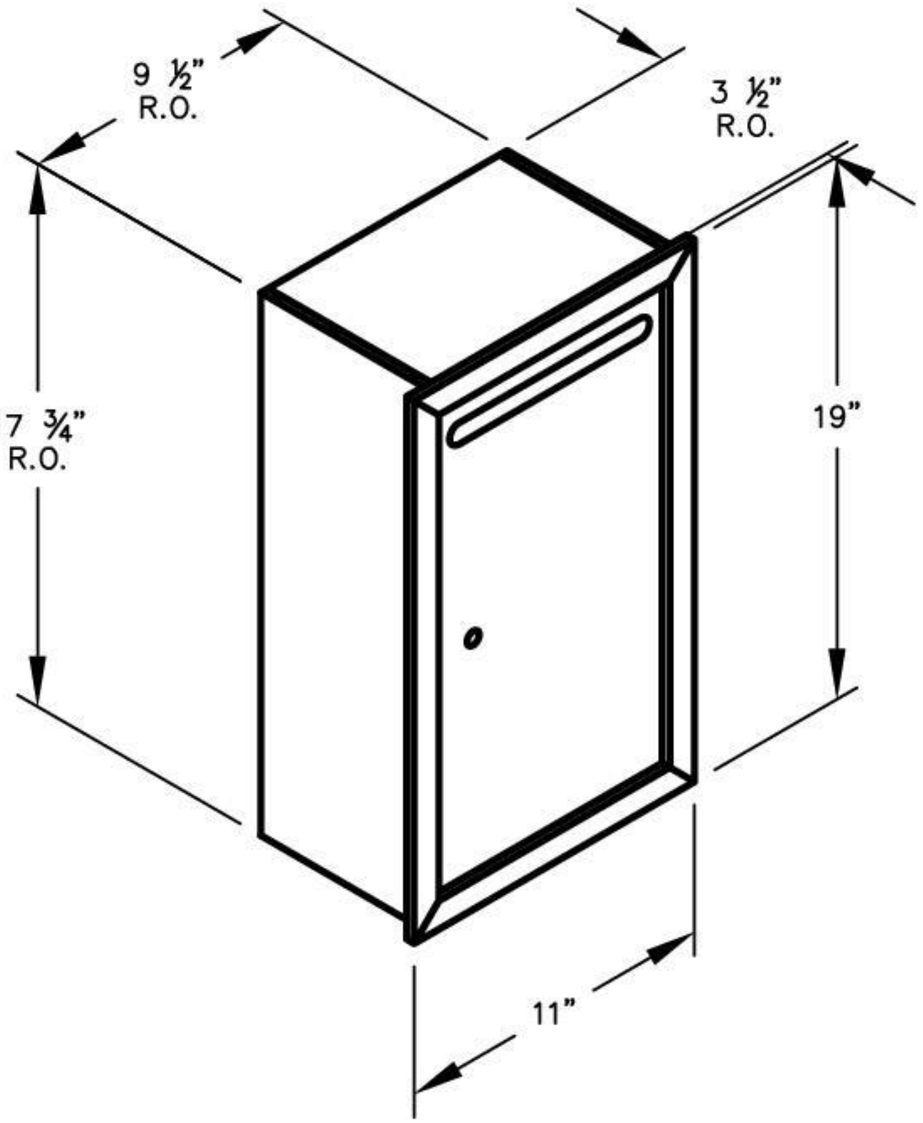

(1) 2265 – SLIM
RECESSED MOUNTED

MODEL #2265
LETTER BOX

FOR PRIVATE ACCESS ONLY