FRONT VIEW

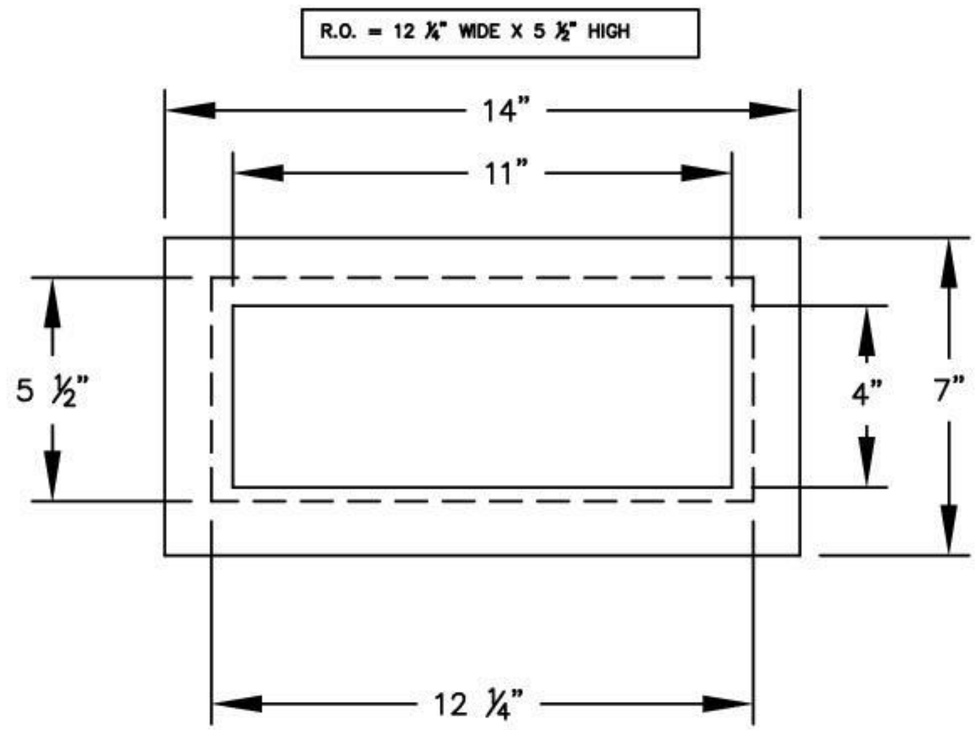

SIDE VIEW

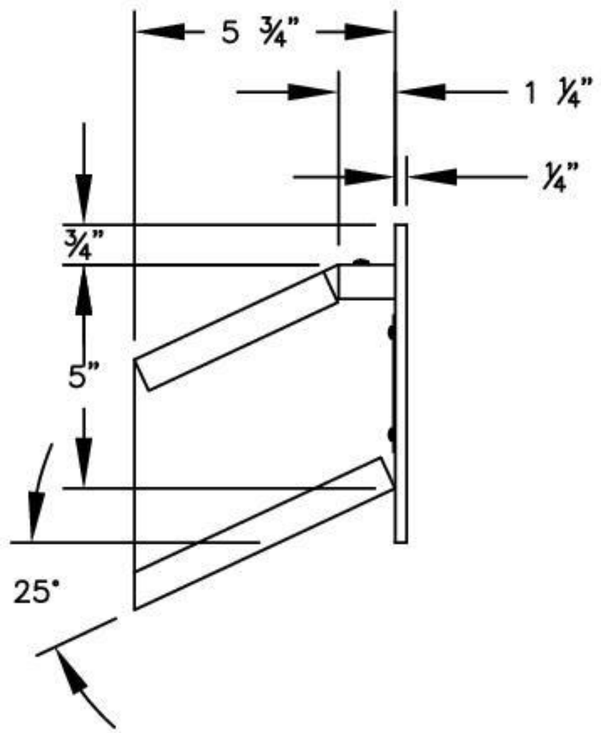

2255 – MAIL DROP

MODEL #2255
MAIL DROP