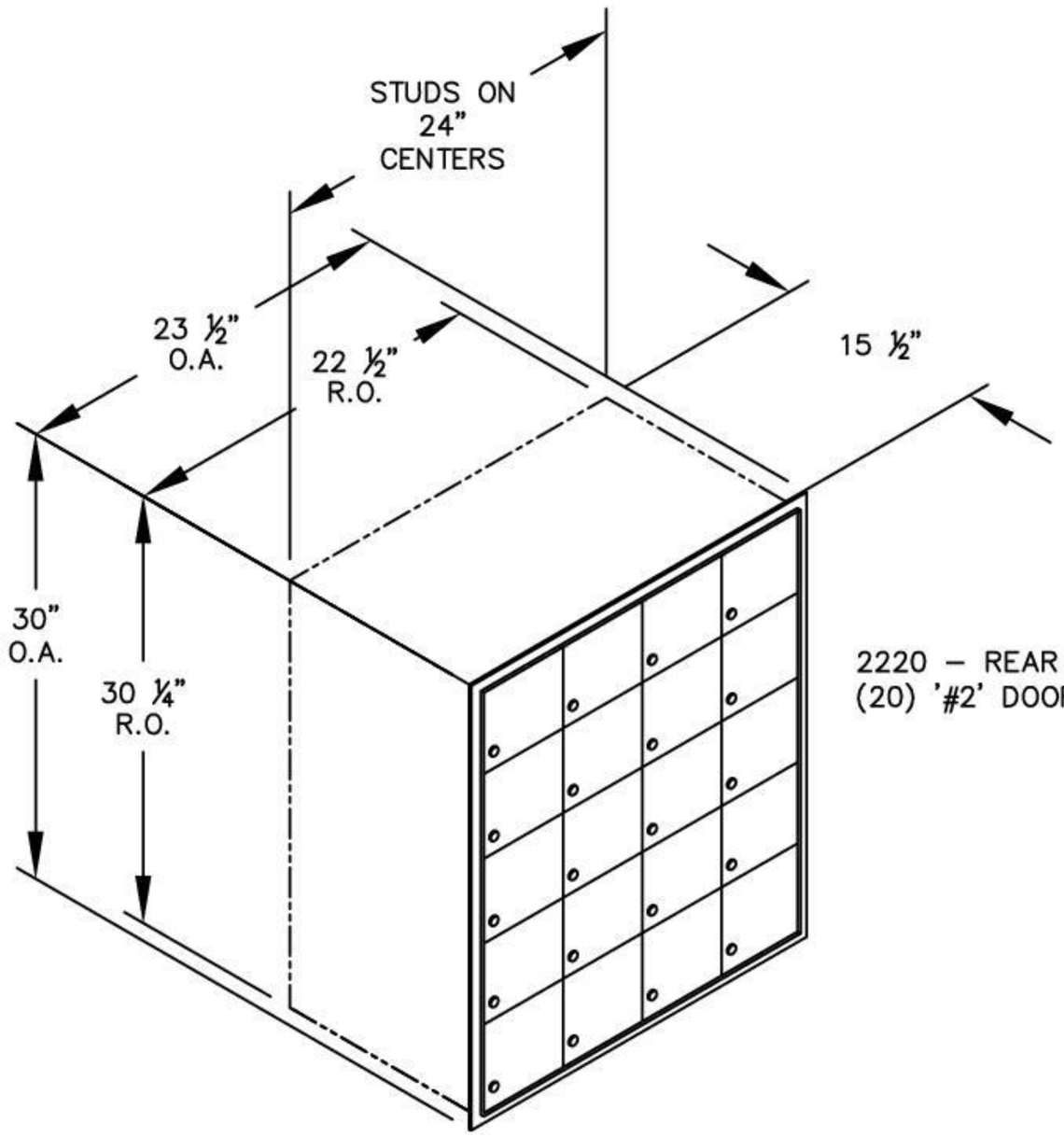

2220 – REAR LOADING
(20) '#2' DOORS

MODEL #2220
ALUMINUM MAILBOXES
STANDARD SYSTEM
REAR LOADING