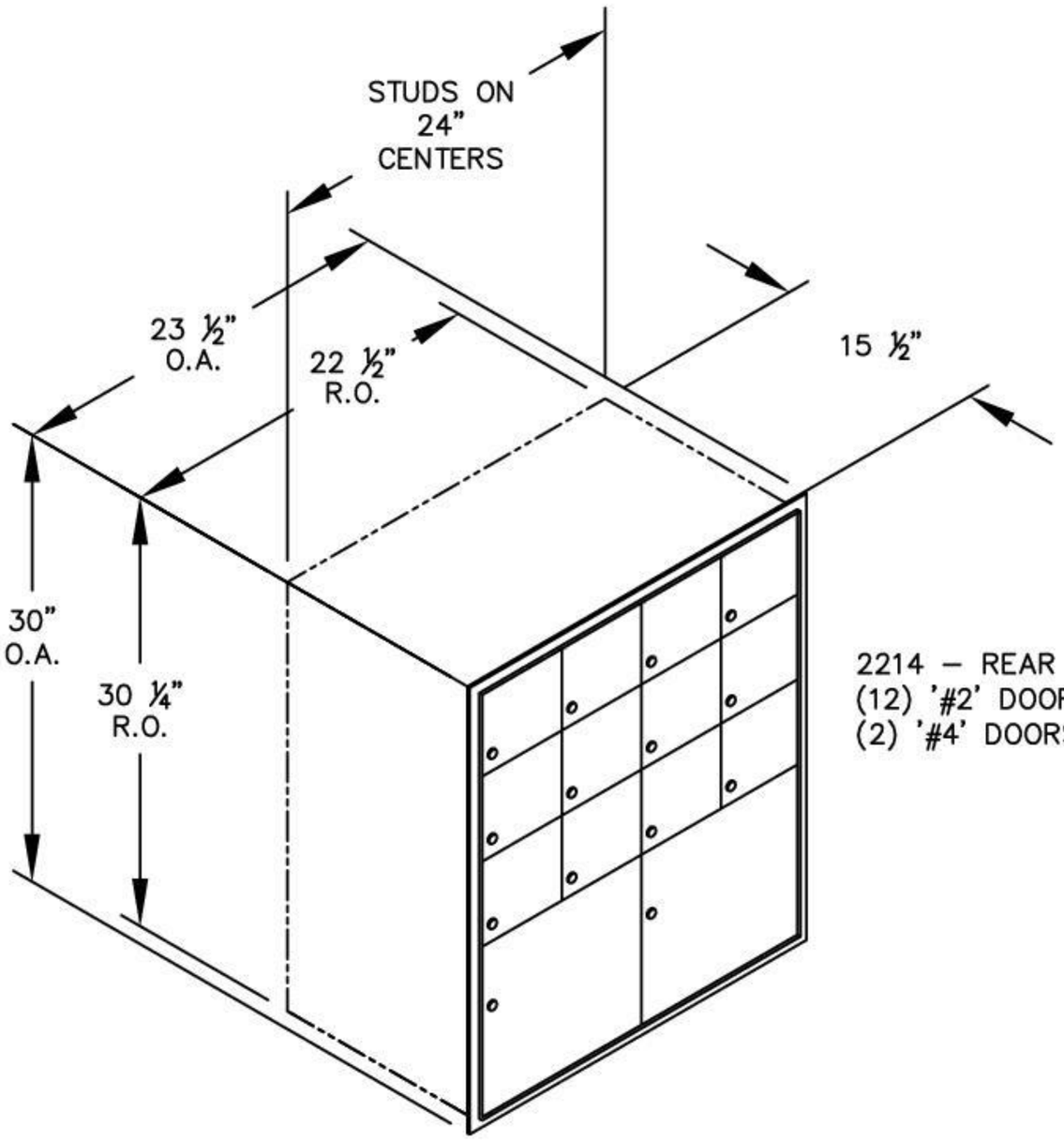

2214 – REAR LOADING
(12) '#2' DOORS
(2) '#4' DOORS

MODEL #2214
ALUMINUM MAILBOXES
STANDARD SYSTEM
REAR LOADING