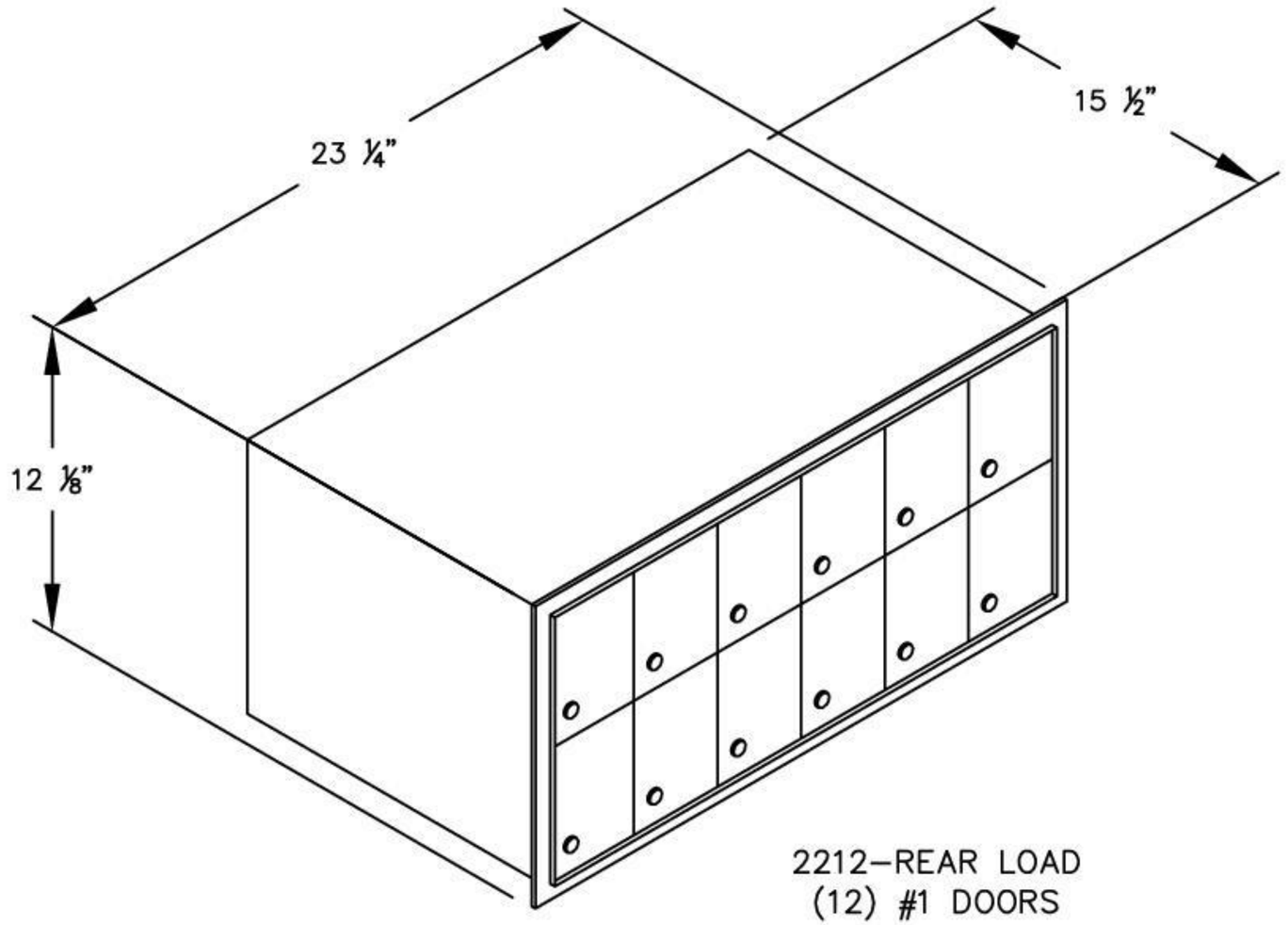

2212–REAR LOAD
(12) #1 DOORS

TYPICAL INSTALLATION:
(See Installation Instructions for more detail)

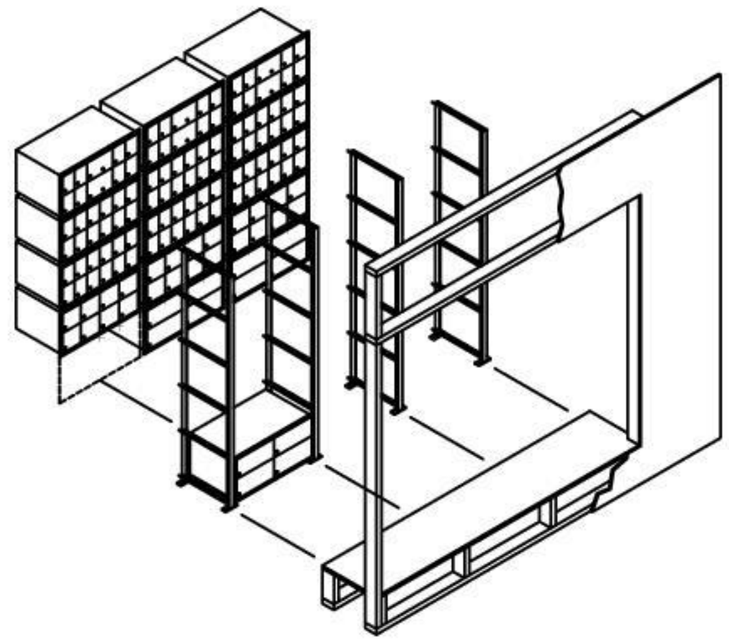

MODEL #2212
ALUMINUM MAILBOXES
RACK LADDER SYSTEM