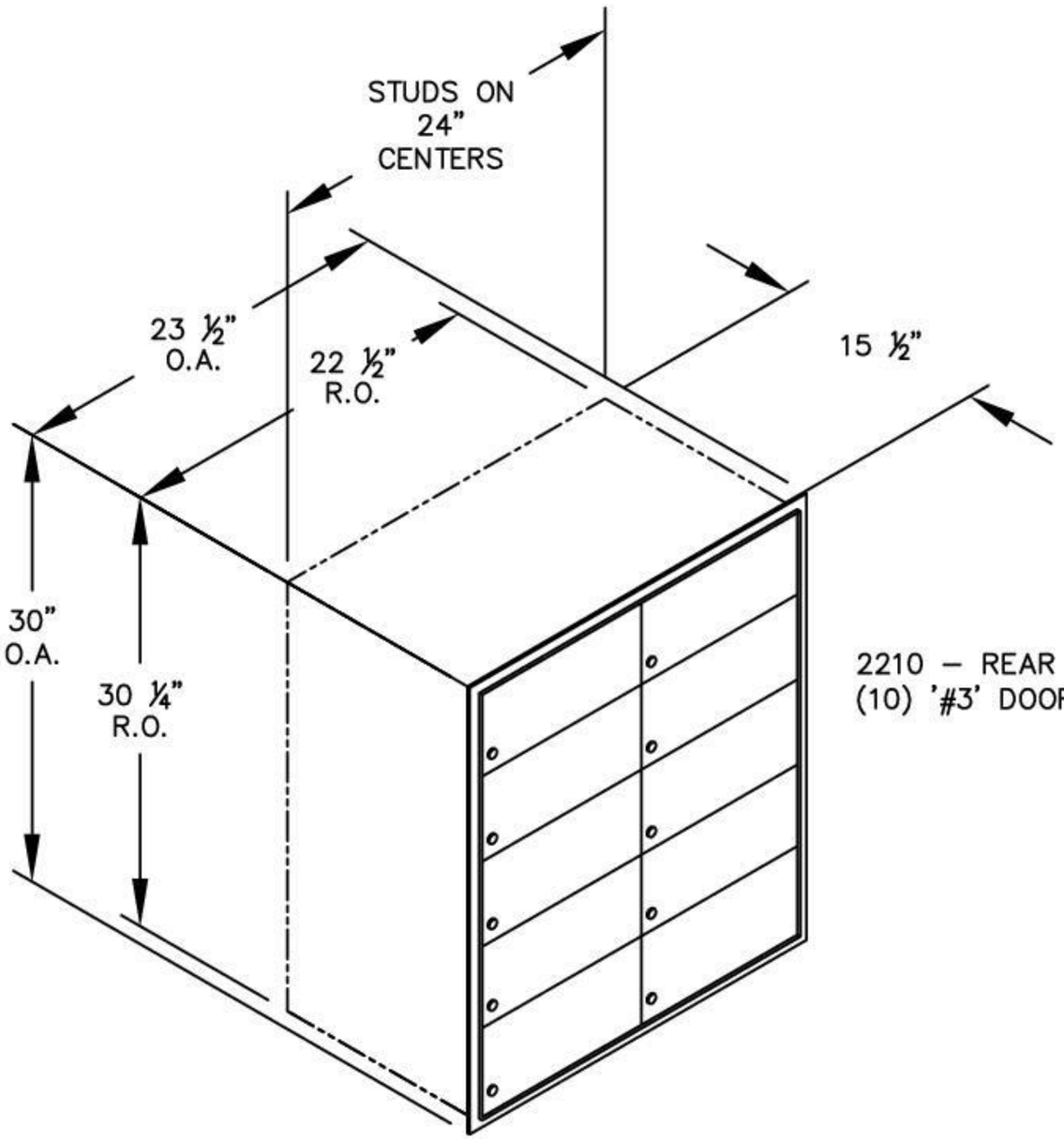

2210 – REAR LOADING
(10) '#3' DOORS

MODEL #2210
ALUMINUM MAILBOXES
STANDARD SYSTEM
REAR LOADING