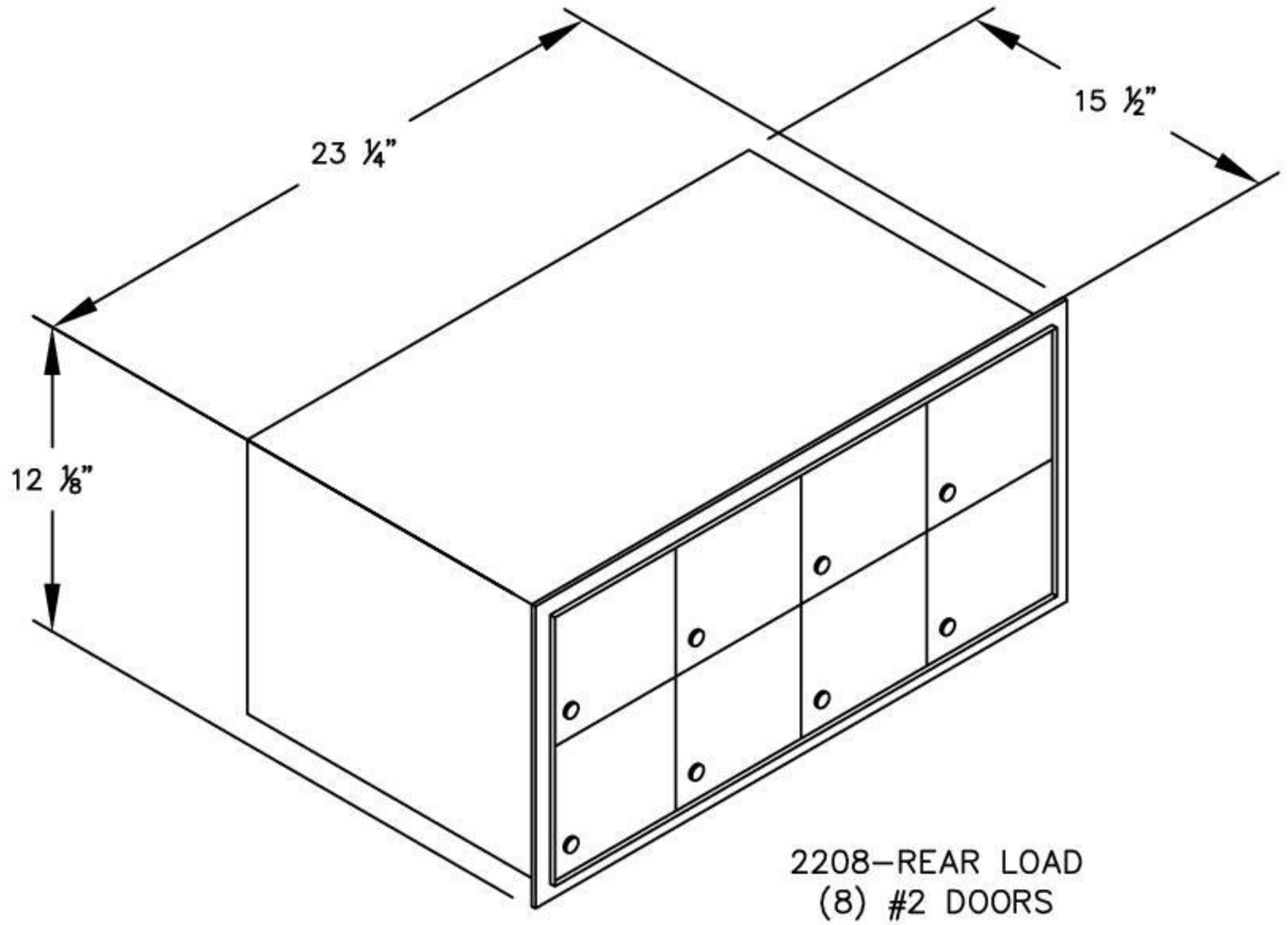

2208–REAR LOAD
(8) #2 DOORS

TYPICAL INSTALLATION:
(See Installation Instructions for more detail)

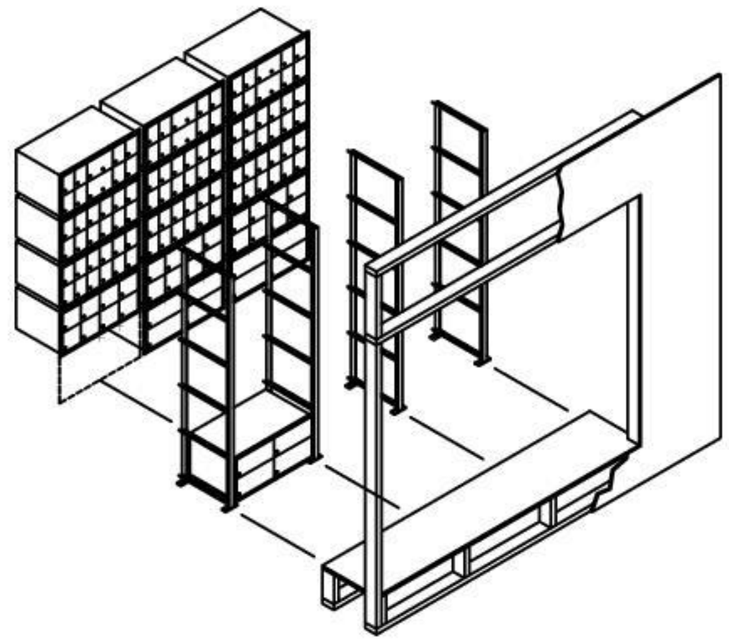

MODEL #2208
ALUMINUM MAILBOXES
RACK LADDER SYSTEM