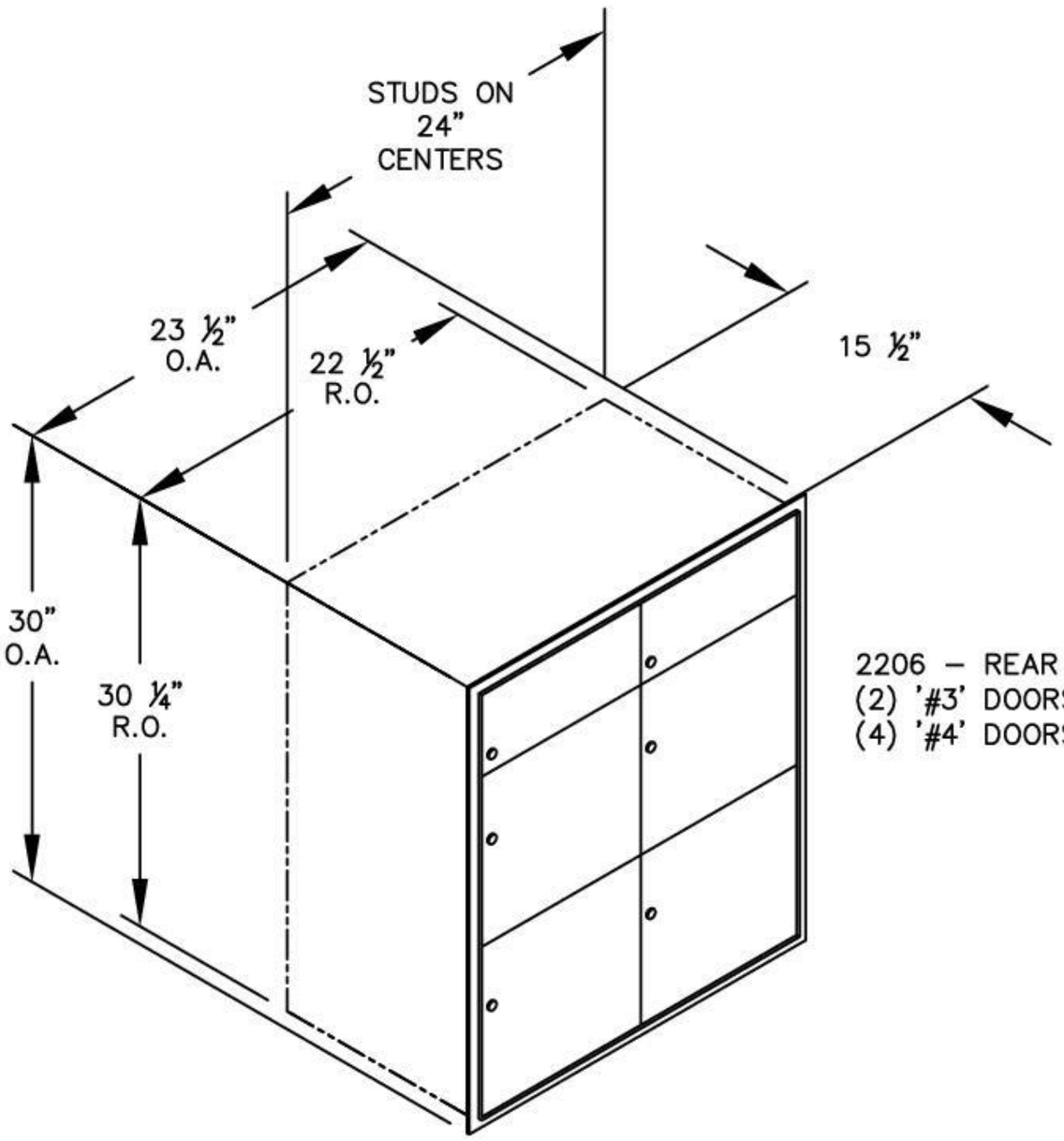


2206 – REAR LOADING
(2) '#3' DOORS
(4) '#4' DOORS

MODEL #2206
ALUMINUM MAILBOXES
STANDARD SYSTEM
REAR LOADING