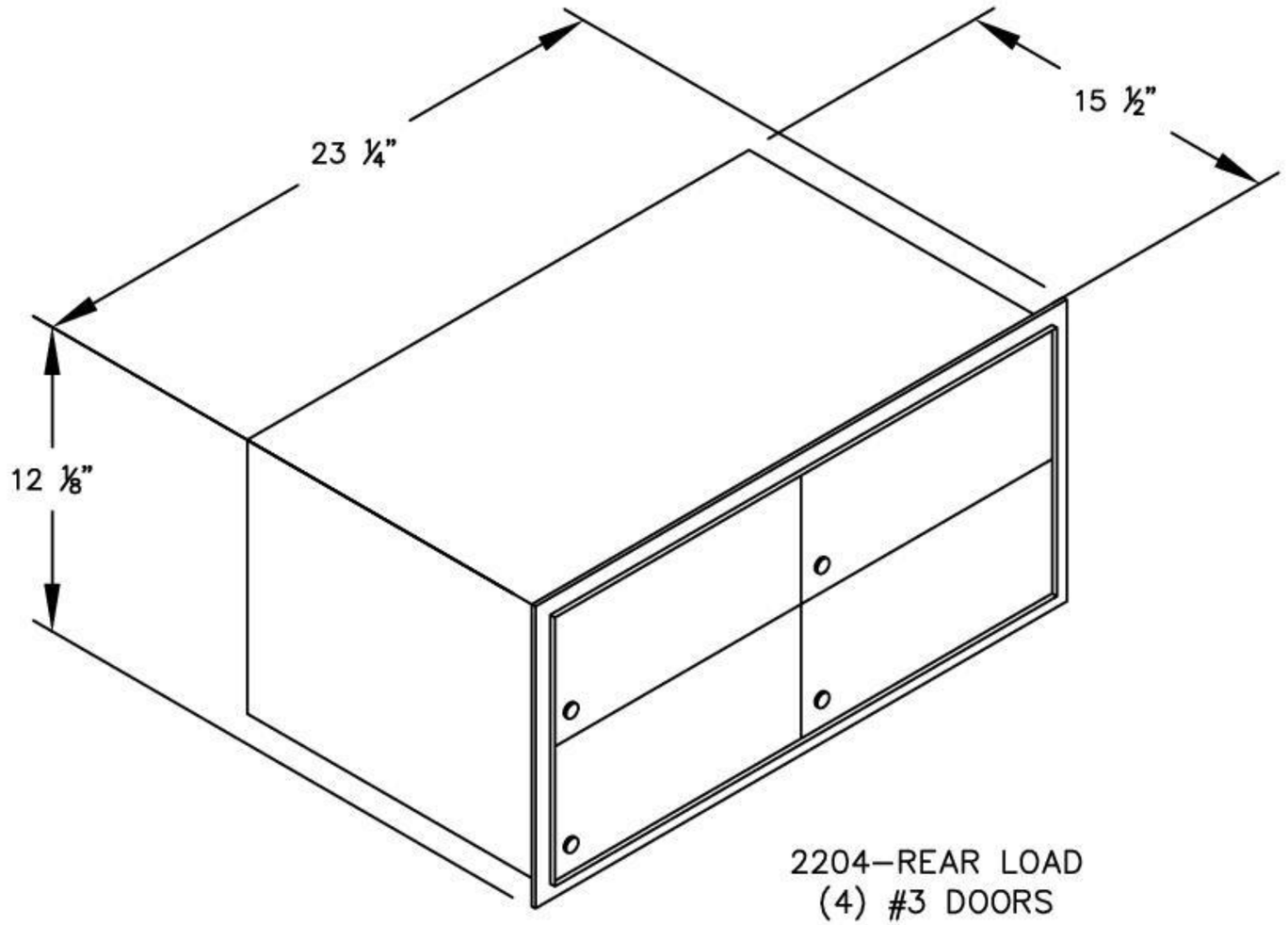

2204–REAR LOAD
(4) #3 DOORS

TYPICAL INSTALLATION:
(See Installation Instructions for more detail)

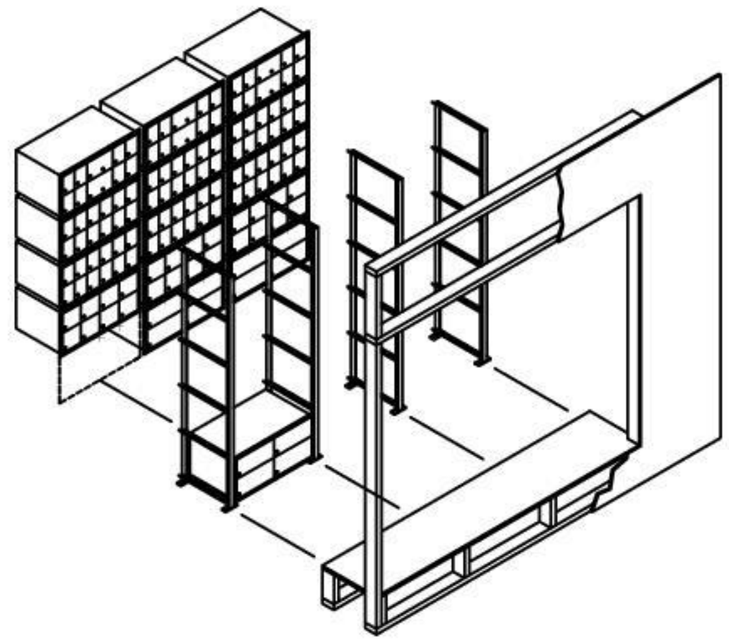

MODEL #2204
ALUMINUM MAILBOXES
RACK LADDER SYSTEM