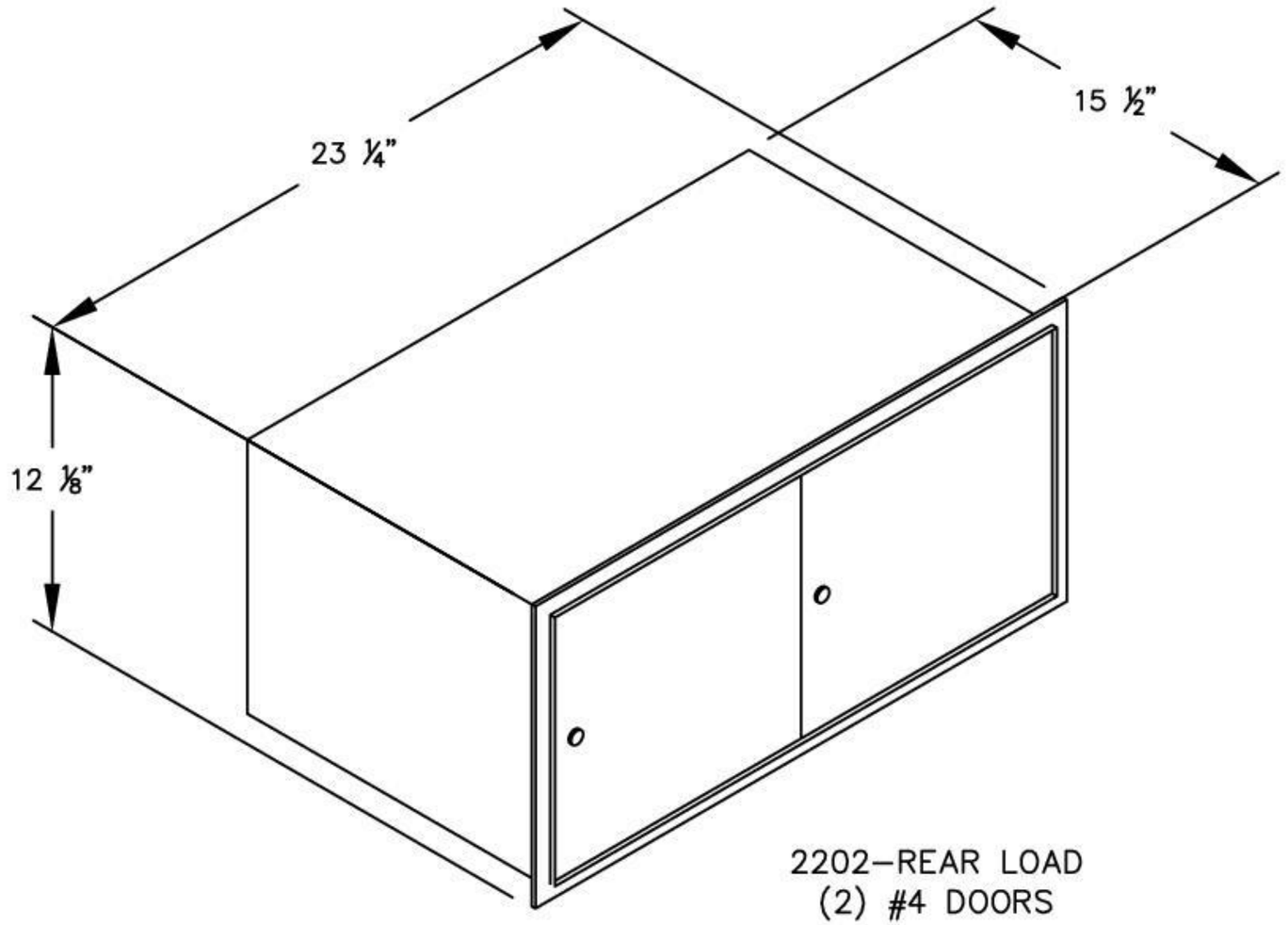

2202–REAR LOAD
(2) #4 DOORS

TYPICAL INSTALLATION:
(See Installation Instructions for more detail)

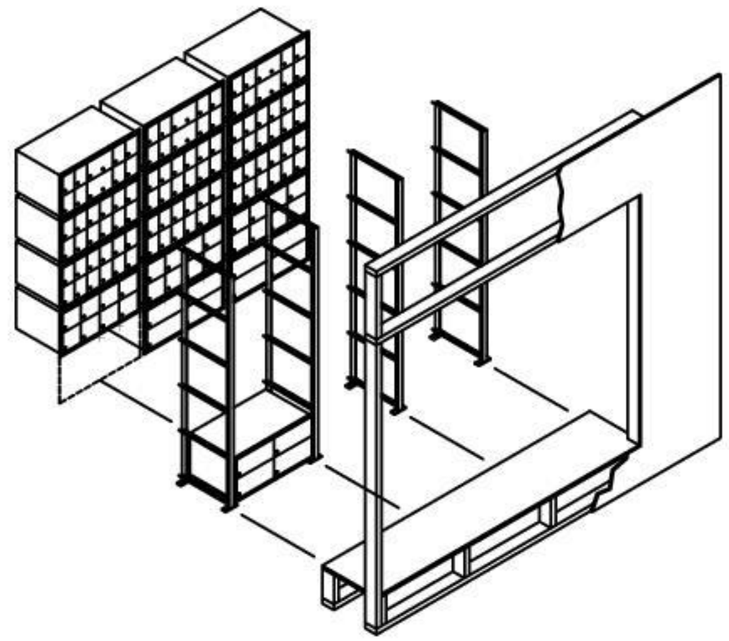

MODEL #2202
ALUMINUM MAILBOXES
RACK LADDER SYSTEM