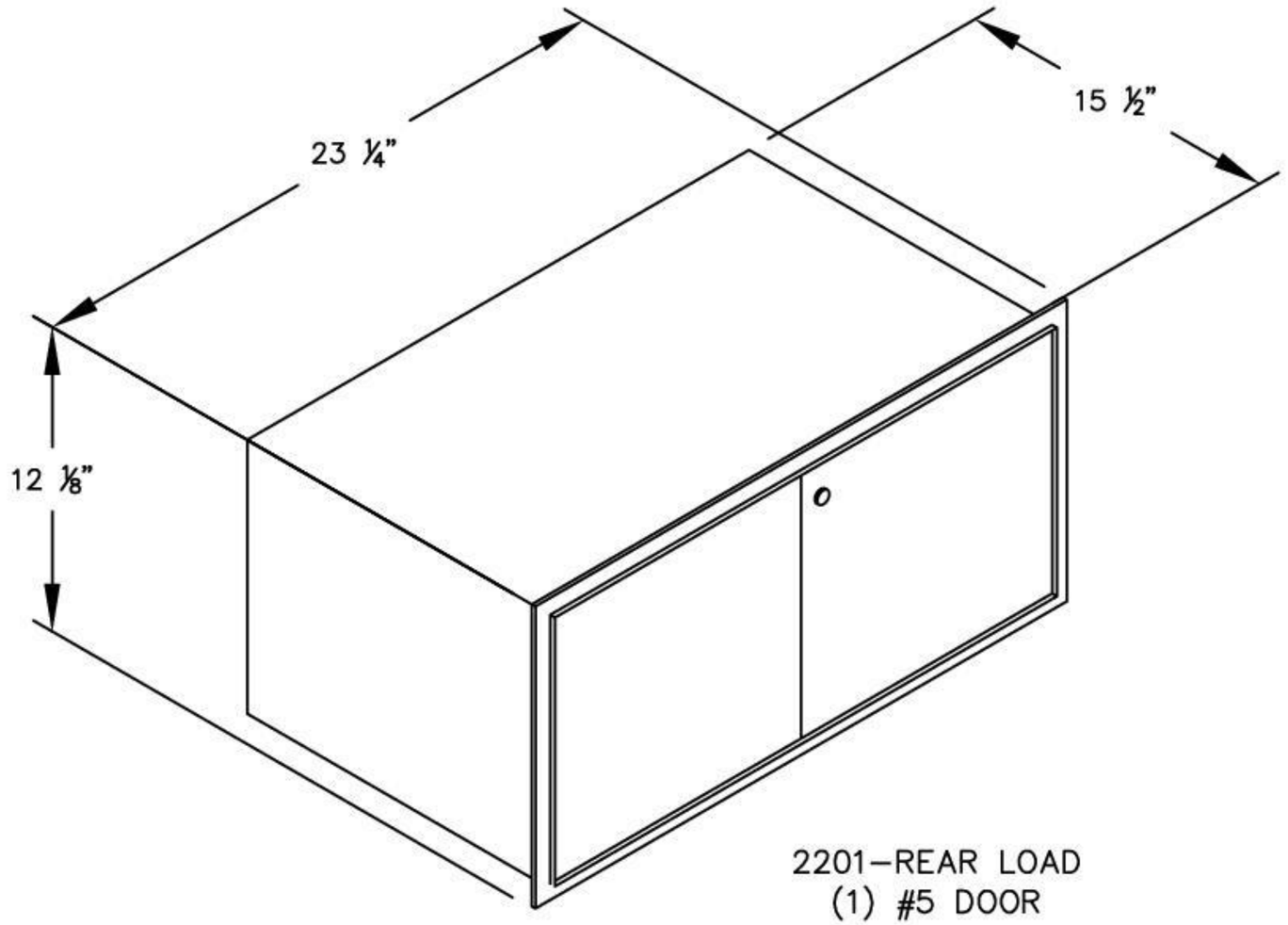

2201–REAR LOAD
(1) #5 DOOR

TYPICAL INSTALLATION:
(See Installation Instructions for more detail)

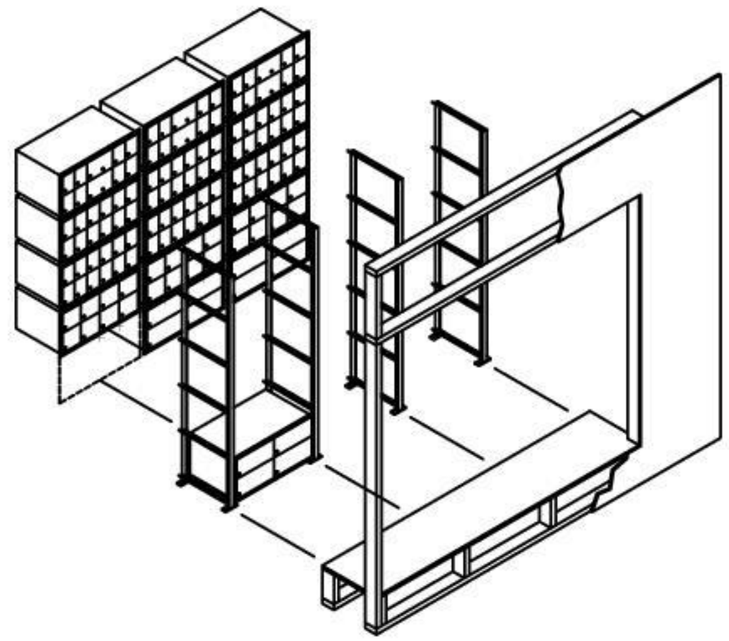

MODEL #2201
ALUMINUM MAILBOXES
RACK LADDER SYSTEM