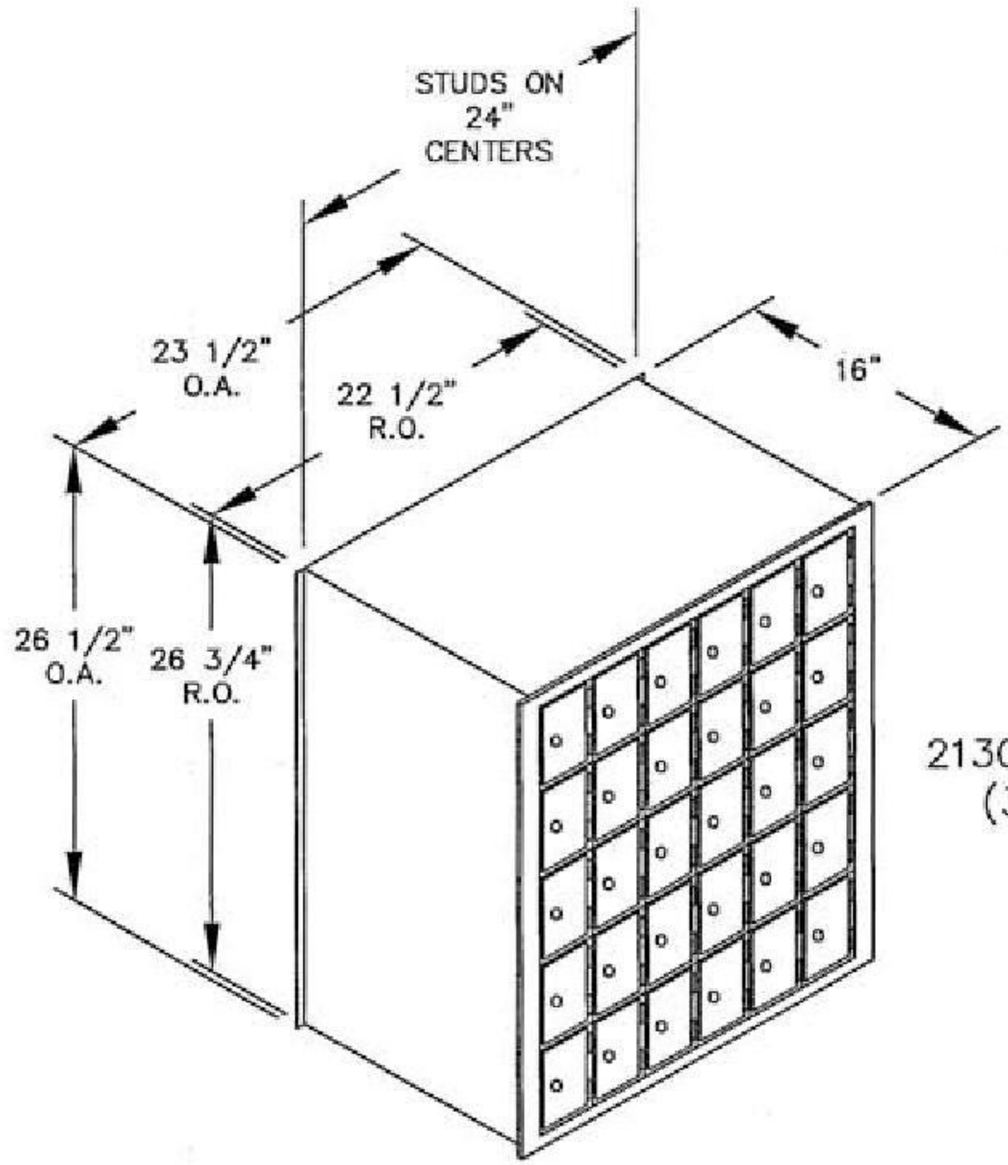

2130FL–FRONT LOAD
(30) #1 DOORS

MODEL #2130FL
AMERICANA MAILBOXE

com