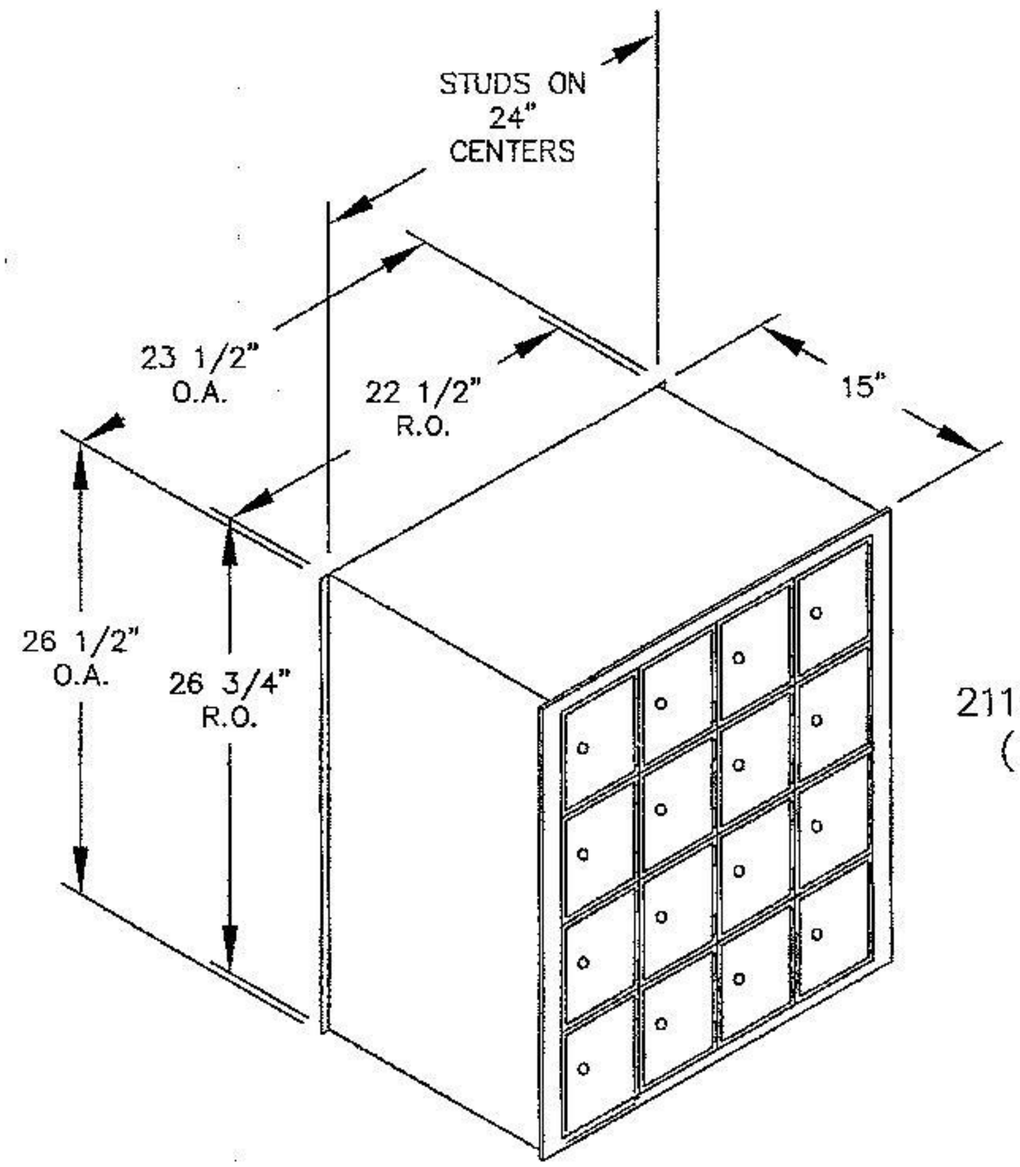

2116RL--REAR LOAD
(16) #2 DOORS

MODEL #2116RL
AMERICANA MAILBOXE

com