1-800-MAILBOX

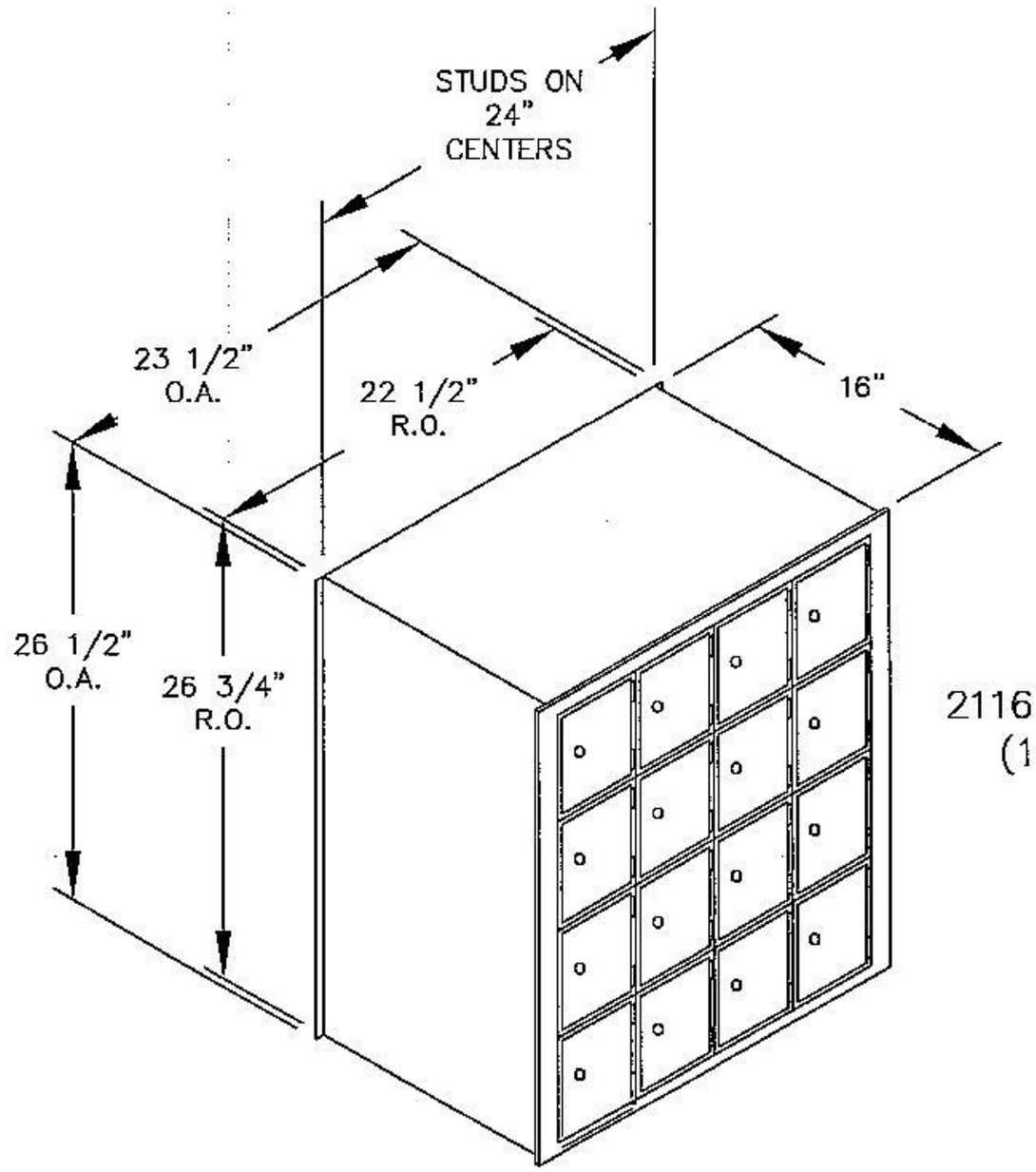

2116FL–FRONT LOAD
(16) #2 DOORS

MODEL #2116FL
AMERICANA MAILBOXES