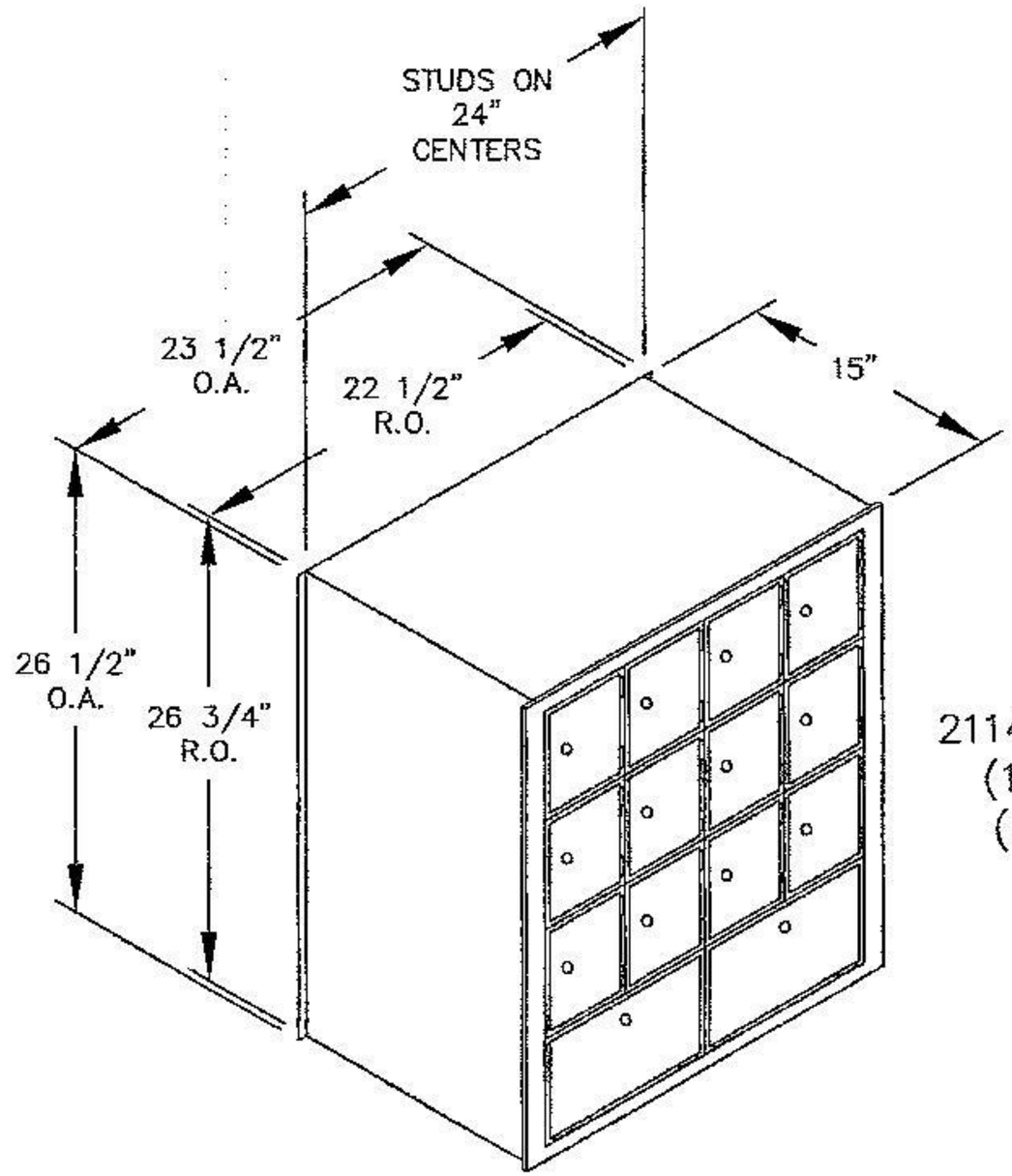

2114RL–REAR LOAD
(12) #2 DOORS
(2) #3 DOORS

MODEL #2114RL
AMERICANA MAILBOXES