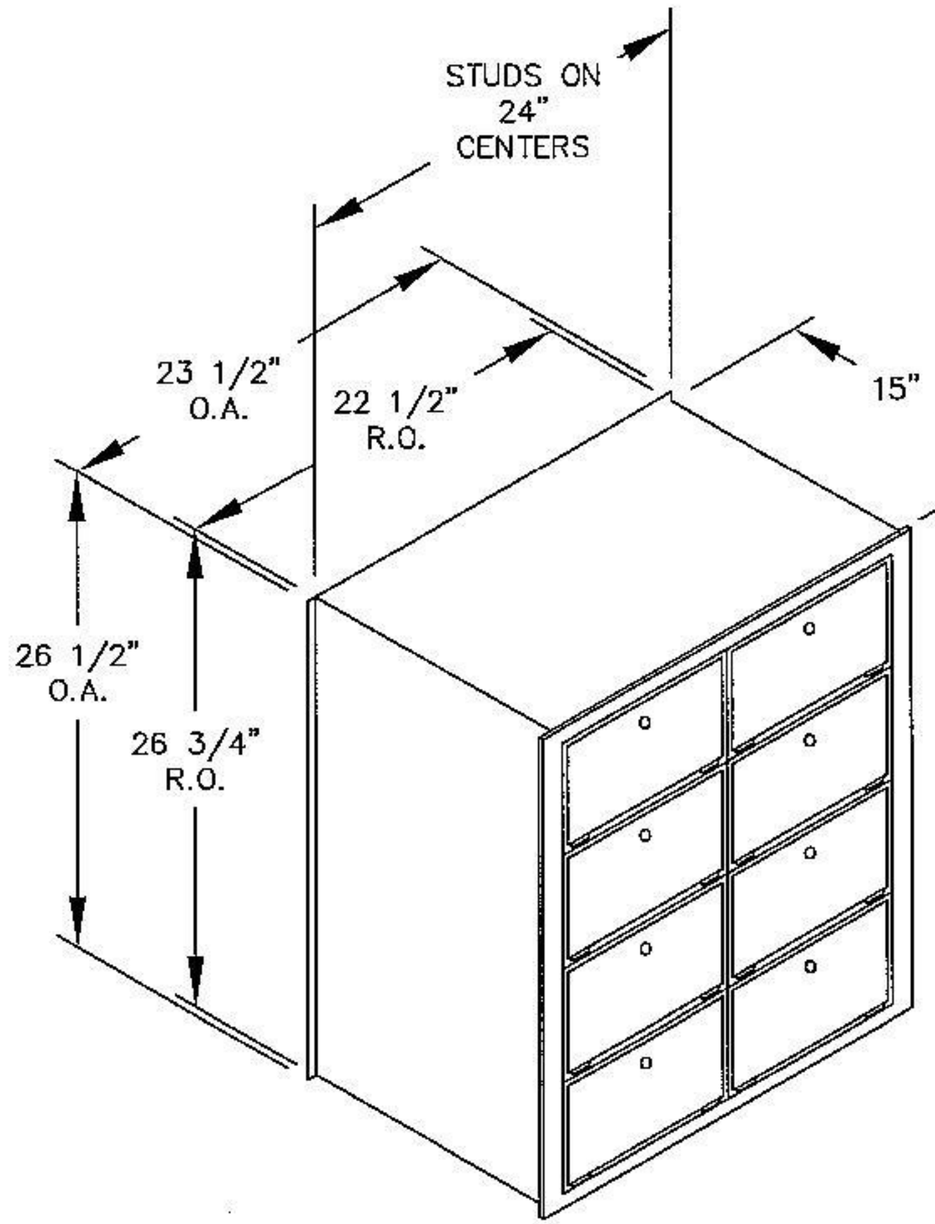

2108RL–REAR LOAD
(8) #3 DOORS

MODEL #2108RL
AMERICANA MAILBOXES