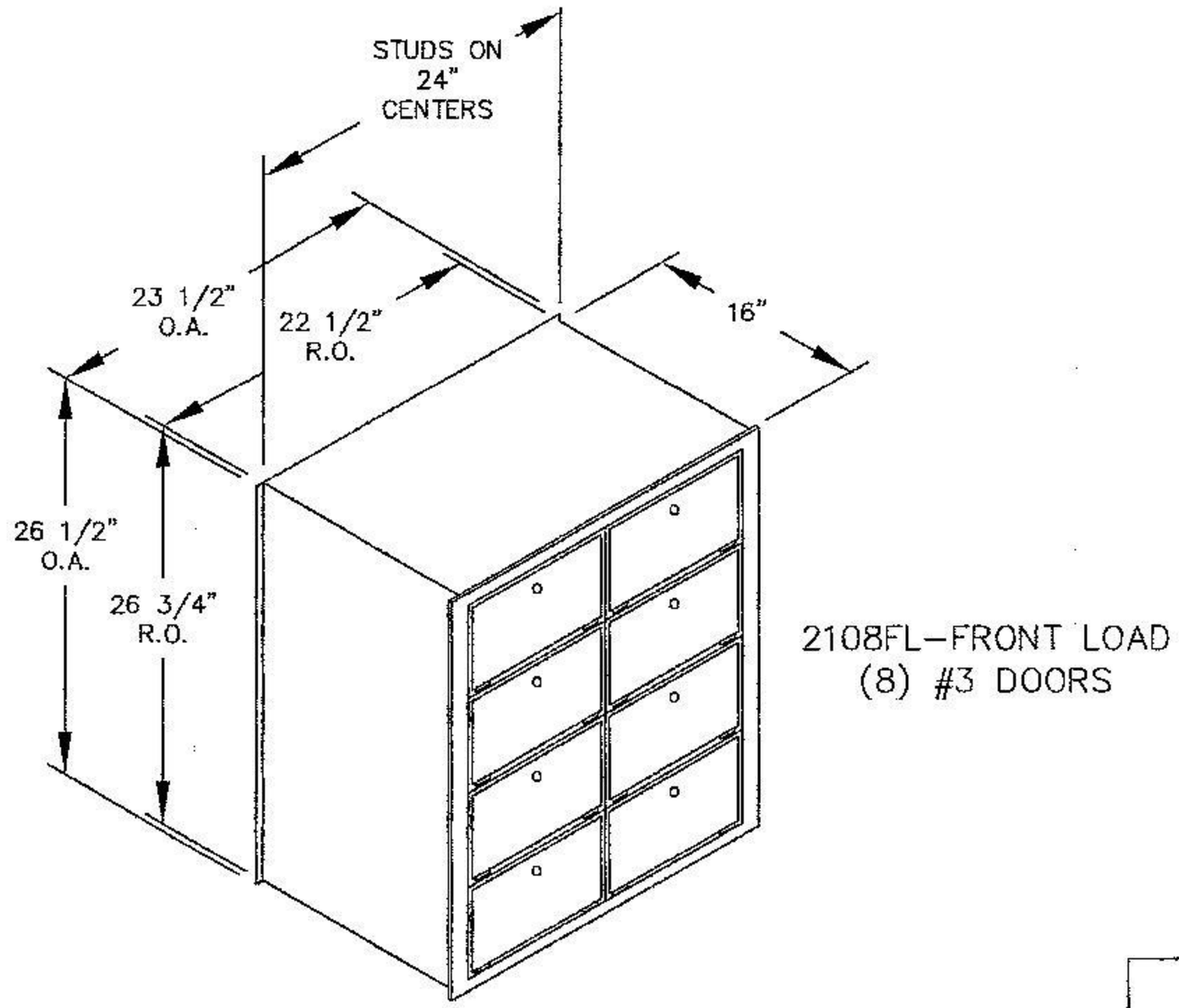

2108FL–FRONT LOAD
(8) #3 DOORS

MODEL #2108FL
AMERICANA MAILBOXES