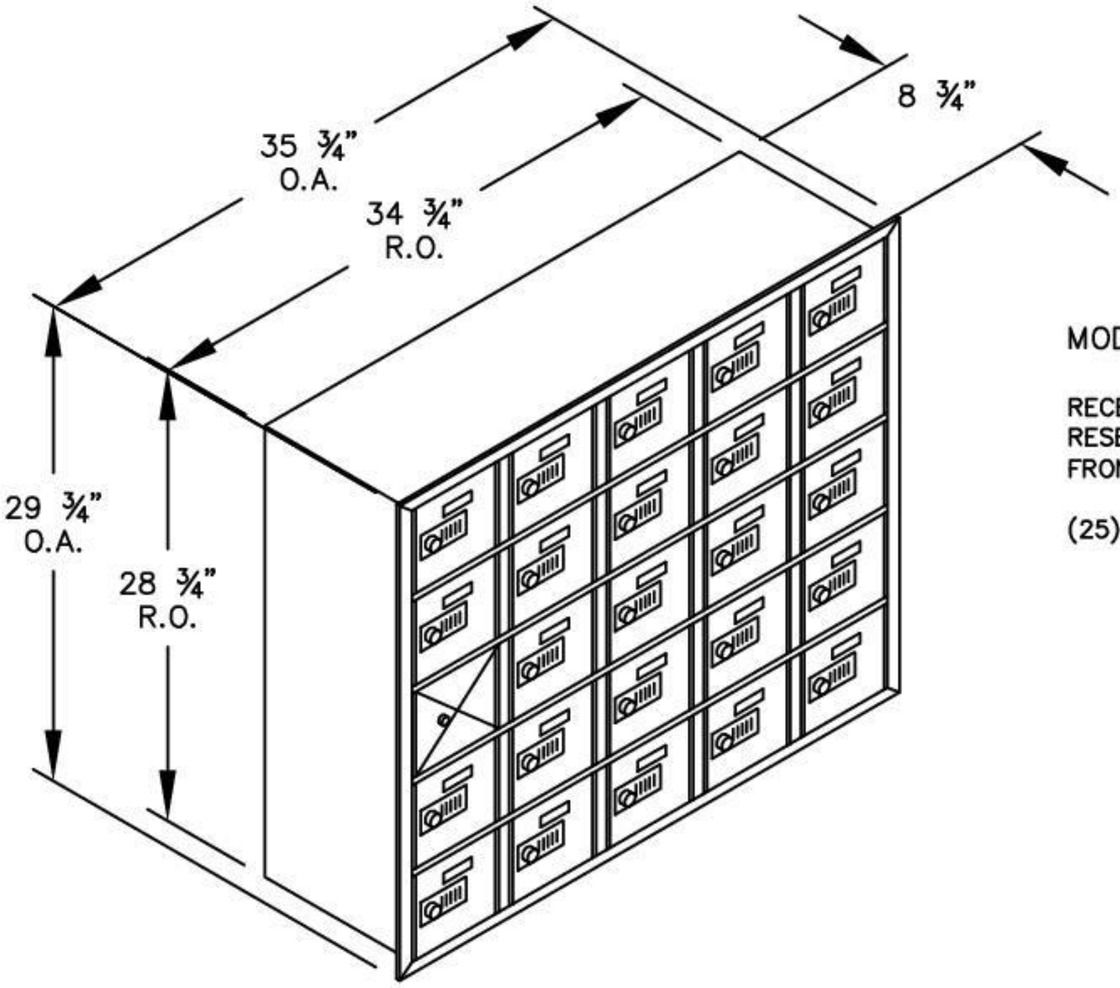

MODEL #19158–25

RECESSED MOUNTED
RESETTABLE COMBINATION LOCKS
FRONT ACCESS PANEL (INCLUDES MASTER PANEL LOCK)

(25) 'A' DOORS (24 USABLE) – 8" DEEP COMPARTMENTS

MODEL #19158–25

CELL PHONE LOCKER
WITH FRONT ACCESS PANEL

RECESSED MOUNTED
RESETTABLE COMBINATION LOCKS
8" DEEP COMPARTMENTS

AVAILABLE FINISHES:
ALUMINUM, BRONZE, SANDSTONE

DRAWN: 3/2020