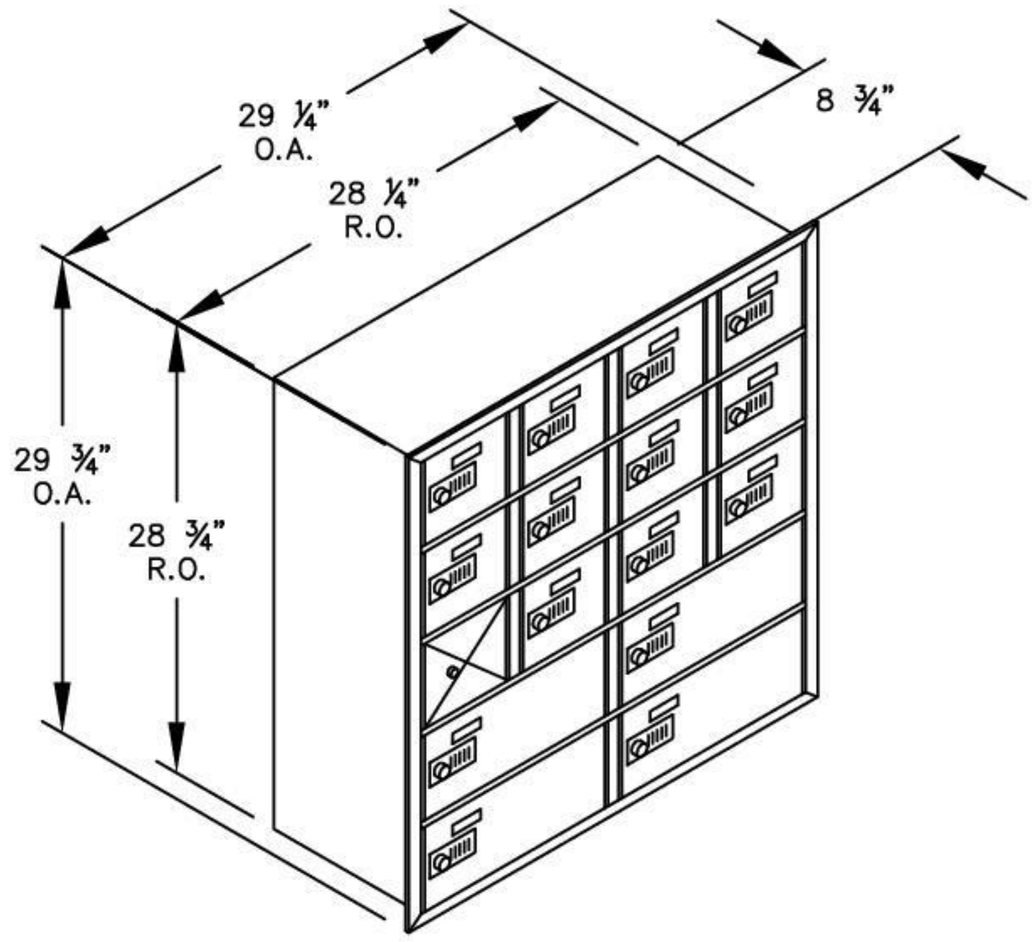

MODEL #19158–16

RECESSED MOUNTED
RESETTABLE COMBINATION LOCKS
FRONT ACCESS PANEL (INCLUDES MASTER PANEL LOCK)

(12) 'A' DOORS (11 USABLE) – 8" DEEP COMPARTMENTS
(4) 'B' DOORS – 8" DEEP COMPARTMENTS

MODEL #19158–16

CELL PHONE LOCKER
WITH FRONT ACCESS PANEL

RECESSED MOUNTED
RESETTABLE COMBINATION LOCKS
8" DEEP COMPARTMENTS

AVAILABLE FINISHES:
ALUMINUM, BRONZE, SANDSTONE

DRAWN: 3/2020