4B+ Security Upgrade Kit – 3596

Installation Instructions for Vertical Mailboxes – Model 3507

U.S.P.S. Approved

Installation instructions for Salsbury Industries 7-Door Model 3507 vertical mailbox security upgrade kit. It is recommended that the installation instructions be read completely prior to beginning work.

Kit Contents

(If a smaller unit than the 7-door model 3507 is being upgraded, see the appropriate instruction sheet and discard parts not needed.)

(4) Top Security Brackets
(1) Arrow Lock Guard
(1) Arrow Lock Catch
(3) Templates (#1, #2 and #3)
Installation Instructions
Hardware Bag
(4) 3/16"x7/16" blind rivets
(10) #8x3/8" self-tapping screws
(2) #10-32x1-1/4" screws
(2) #10-32 locknuts

Tools Required

Hammer
Center Punch
Phillips Screwdriver
Utility Knife
Pencil
Tin Snips
Masking Tape
3/8" Open-end Wrench
Chisel
Wood Block (2x4 x 6" long)
Blind Rivet Gun
Drill Motor
1/8" diameter Drill Bit
1/4" diameter Drill Bit
7/32" diameter Drill Bit

Disassembly and Removal from Wall

The postal delivery person must open the compartment assembly to provide access for installing the security kit. Remove the compartment assembly from the outer enclosure by tilting the compartment assembly out and lifting it up to clear the lower edge of the opening in the outer enclosure. Remove the outer enclosure from the wall by removing the screws that secure it to the wall.

Installing Arrow Lock Guard on USPS Arrow Lock

Lay the compartment assembly face down on a table. Remove the top two screws from the USPS Arrow Lock as shown in Illustration 1. Discard these screws. Remove the lock from the lock-mounting bracket.

Stand the compartment assembly upright on a table. Open the door that covers the USPS Arrow Lock. Using the drill motor and the 1/4" diameter drill bit, drill out the two tapped holes from which the lock mounting screws were removed.

Insert the two #10-32x1-1/4" pan head screws provided into the holes from the front of the bracket, reinstall the lock at the rear of the bracket, add the lock guard provided as shown in Illustration 2, and attach the #10-32 lock nuts provided to the back of the screws. Holding the #10-32 locknuts with the 3/8" wrench, tighten the Arrow lock screws with the Phillips screwdriver.

Drill two 1/8" diameter holes in the compartment assembly frame through the two holes in the top of the Arrow Lock guard. Install the #8 x 3/8" self-tapping screws through the guard holes into the frame holes.

Modify Compartment Assembly Rear Wall

Using Template #1 provided, follow template instructions to cut five notches in the compartment assembly rear wall. See Illustration 3 for dimensions of notches. Fold notch flaps to outside. See Illustration 4 for the final appearance of the compartment assembly.

Removing Old Arrow Lock Catch

Turn the outer enclosure upside down and rest it on a table as shown in Illustration 5. Using the chisel or 1/8" diameter drill bit, remove two rivets and old Arrow Lock catch and discard.

Installing Top Security Brackets into Outer Enclosure

Using the Template #2 provided, follow template instructions to install four top security brackets. See Illustration 6.

Installing New Arrow Lock Catch

Turn the outer enclosure over so it is right side up. Using Template #3 provided, follow the template instructions to install the new Arrow Lock catch. See Illustration 7 for catch holes location. See Illustration 8 for the final appearance of the outer enclosure.

Reinstall in Wall

Reinstall outer enclosure in wall. Reinstall compartment assembly into outer enclosure. Ensure that compartment assembly opens, closes, and locks properly.

Illustration 1 – Remove Screws

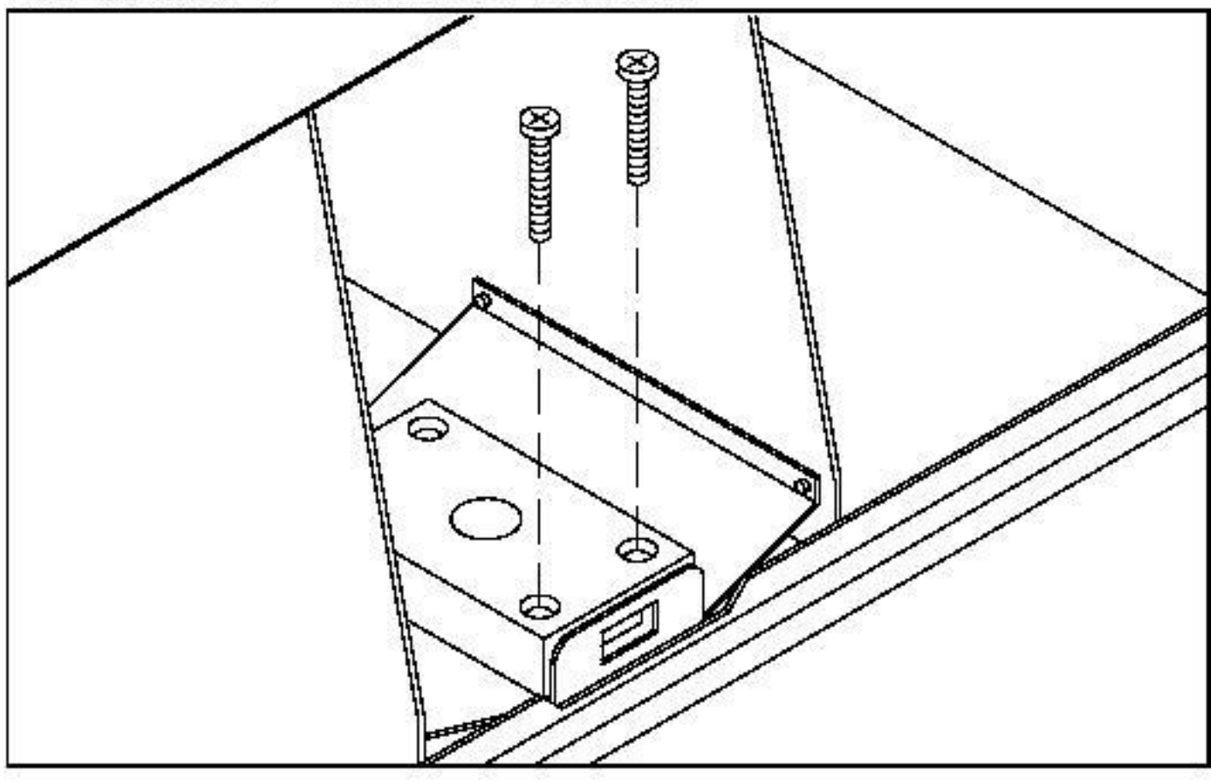

Illustration 2 – Install Arrow Lock & Lock Guard

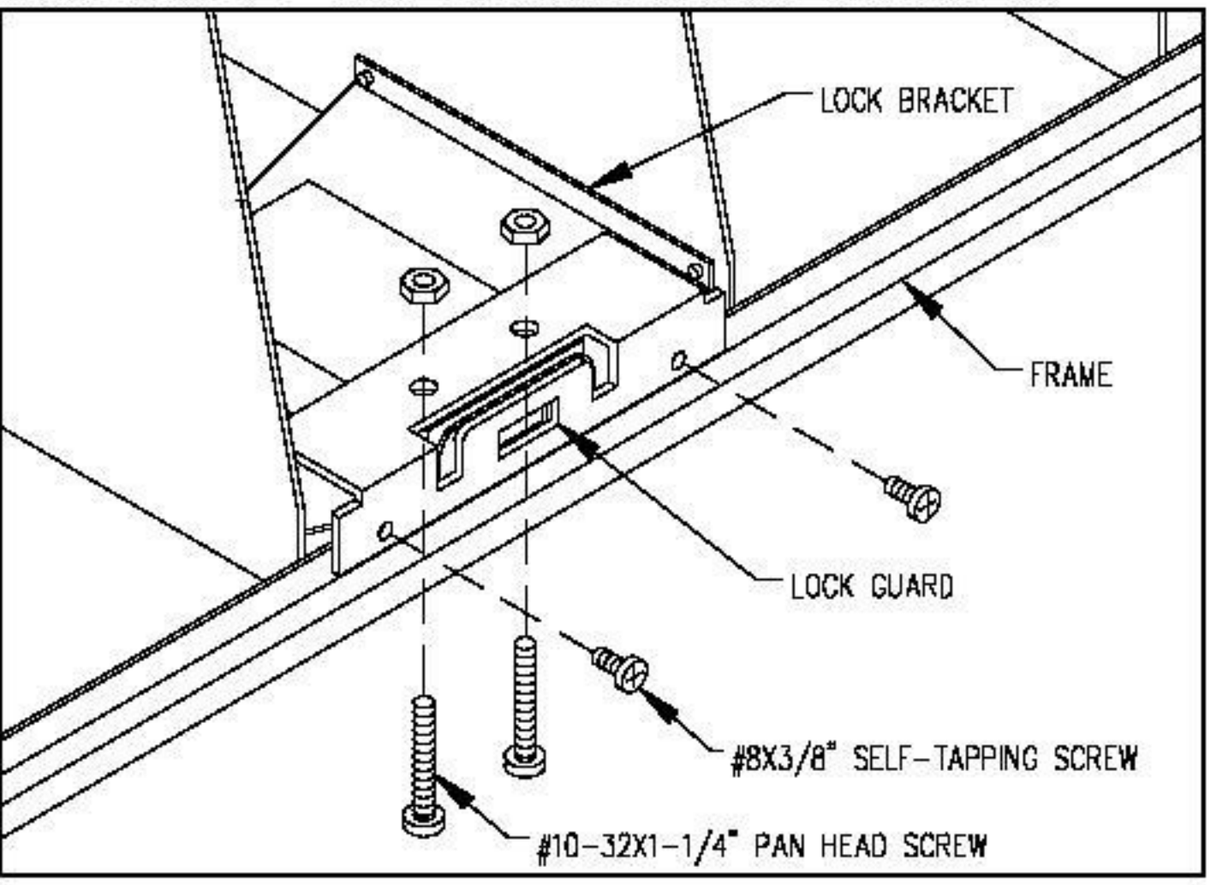

Illustration 3 – Cut Notches

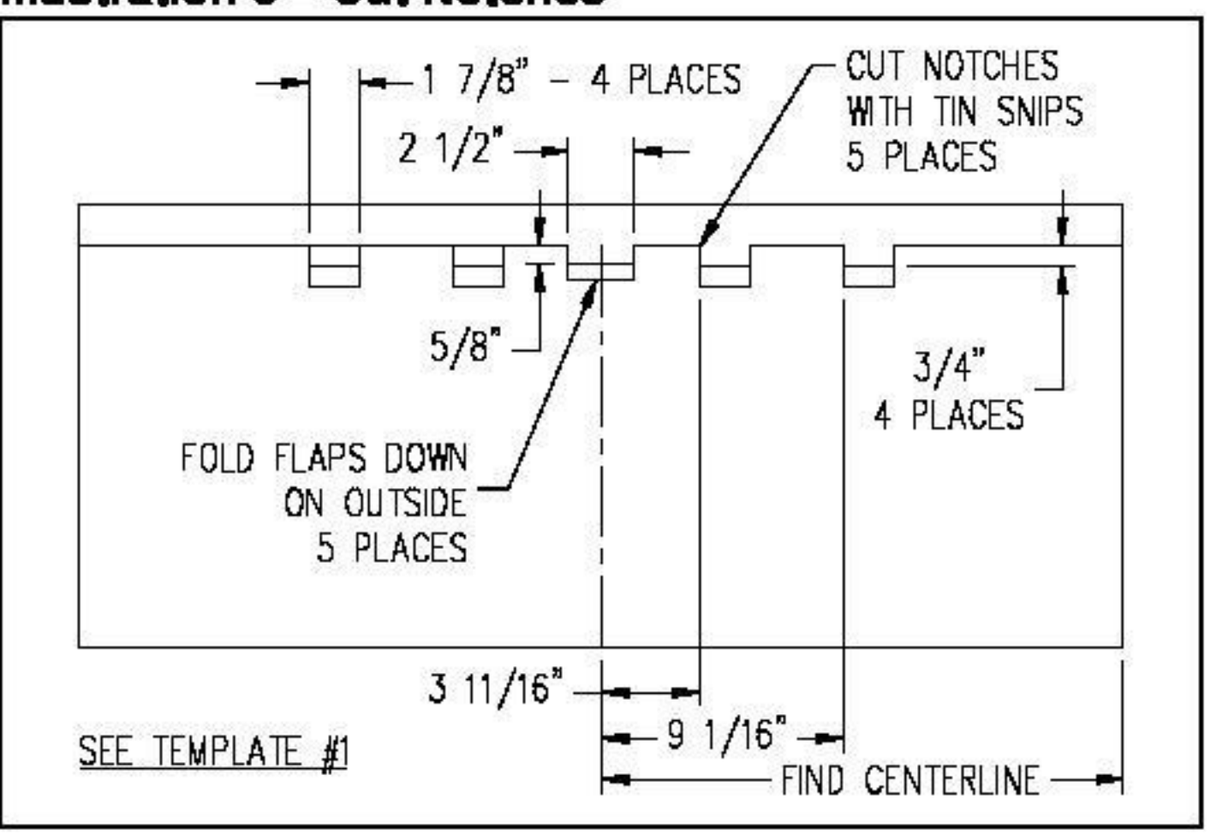

Illustration 4 – Compartment Assembly

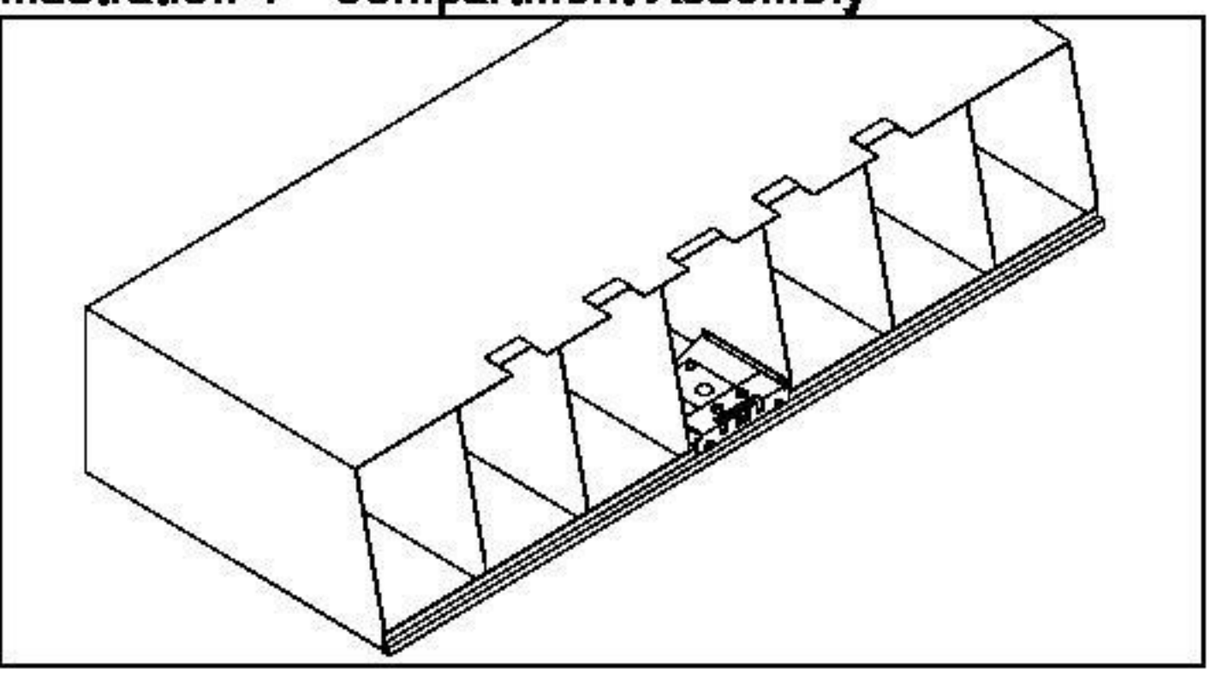

Illustration 5 – Remove Old Arrow Lock Catch

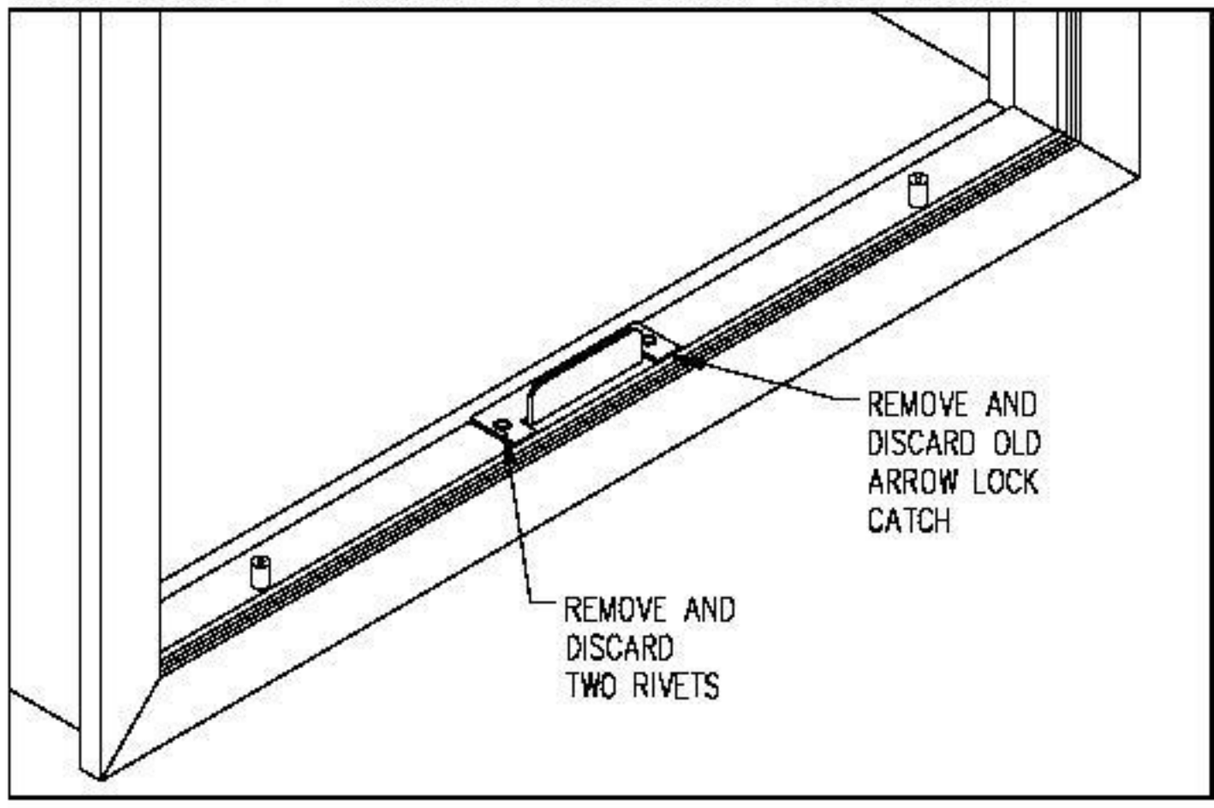

Illustration 6 – Install Top Security Brackets

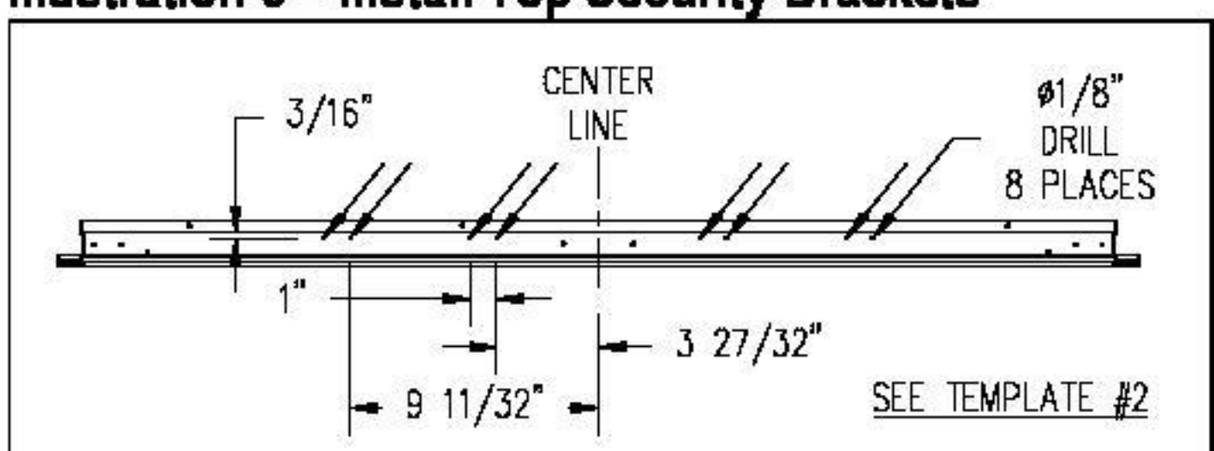

Illustration 7 – Install New Arrow Lock Catch

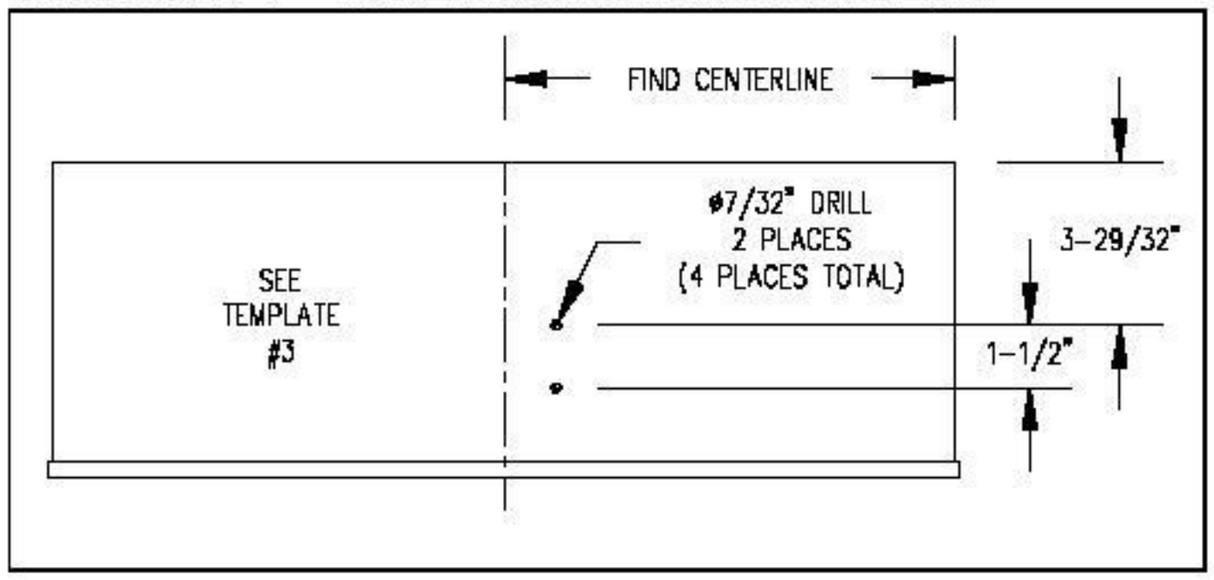

Illustration 8 – Outer Enclosure