Parcel Lockers – 2270 and 2272
Wall Mounted Style Installation Instructions

Thank you for selecting Salsbury's wall mounted parcel locker units. We are confident that the quality and construction of the boxes will prove to be a good investment. The units are fully assembled and ready to be installed. Both units have the same outside dimensions regardless of parcel locker door size. These instructions are intended to assist you in a typical wall installation and it should be understood that they can be modified depending upon your choice in fasteners and materials. It is also recommended that the units are present before starting the wall construction to obtain the best possible installation.

The 2270 and 2272 parcel lockers are often one or more of the units in an aluminum 2200 series rack ladder mailbox installation. See the installation instructions for this product line for additional information. They can also be installed in 3100 and 2300 series free standing mail centers. See the installation instructions for these products for additional information.

Alternately, the 2270 and 2272 parcel lockers are sometimes installed directly into the wall without rack ladders or free standing mail centers. Use the dimensions below when installing independently in a wall. A 2213 trim kit (ordered separately) can be used to finish this type of application.

Notes

1. Wall opening and lumber frame must be square.
2. Parcel lockers should be shielded from direct weather conditions.
3. Store keys in a safe place until ready for use.
4. Hardware is not included to fasten unit into rough opening.
5. Parcel lockers offer tenants a convenient way to receive packages on site and are fit with a two (2) key security system. When the U.S. Postal Service delivers a parcel to the locker, a parcel locker key is placed in the recipient's mailbox. Once the recipient opens the parcel locker, the key is automatically retained in the lock until it is removed with a control key. Parcel lockers include both the tenant lock and the master postal lock.

Standard Dimensions (Model 2270 Shown)

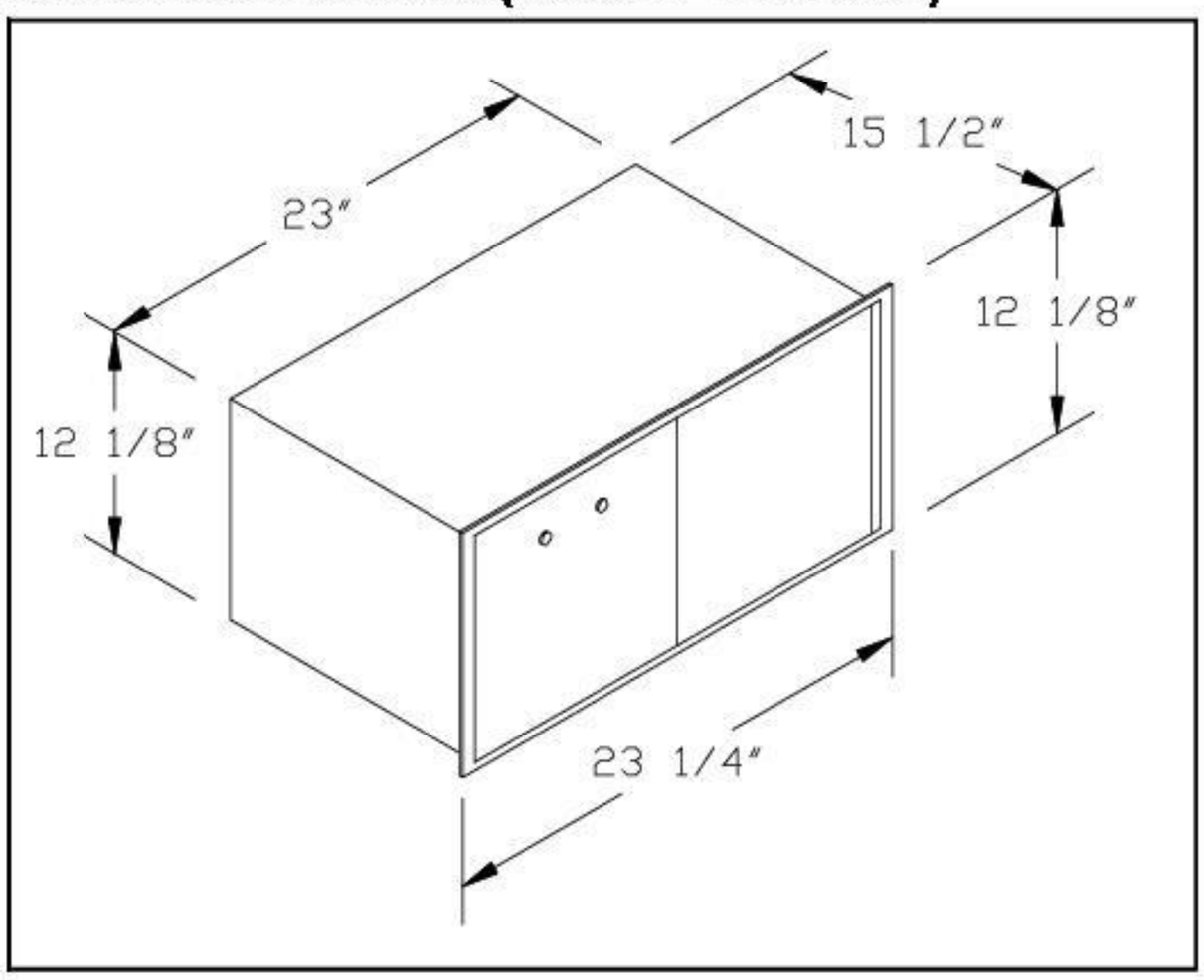

Standard Dimensions (Model 2272 Shown)

