Outgoing Mail Slot Plug Kit
Installation Instructions

Thank you for selecting the outgoing mail slot plug kit. These instructions are for installing the 3370, 3470, or 3770 kit. Once installed, the kit prevents the collection of outgoing mail in the outgoing mail compartment of a CBU or 4C mailbox product. Temporary use of the kit during construction is permissible. Permanent use of the kit to restrict the collection of outgoing mail may only be approved by the U.S. Postal Service. Please contact the U.S. Postal Service for approval or questions regarding the use of this kit.

To install the outgoing mail kit slot plug begin by unscrewing the three (3) T-15 Torx-head screws from the mail slot located on the right master door of the mailbox unit and remove the anti-fish rake (see step 1). Install the outgoing mail slot plug onto the mail slot by re-using the three (3) screws removed in step 1 (see step 2). Installation is now complete.

CBU INSTALLATION - 3370

STEP 1: REMOVE ANTI-FISH RAKE

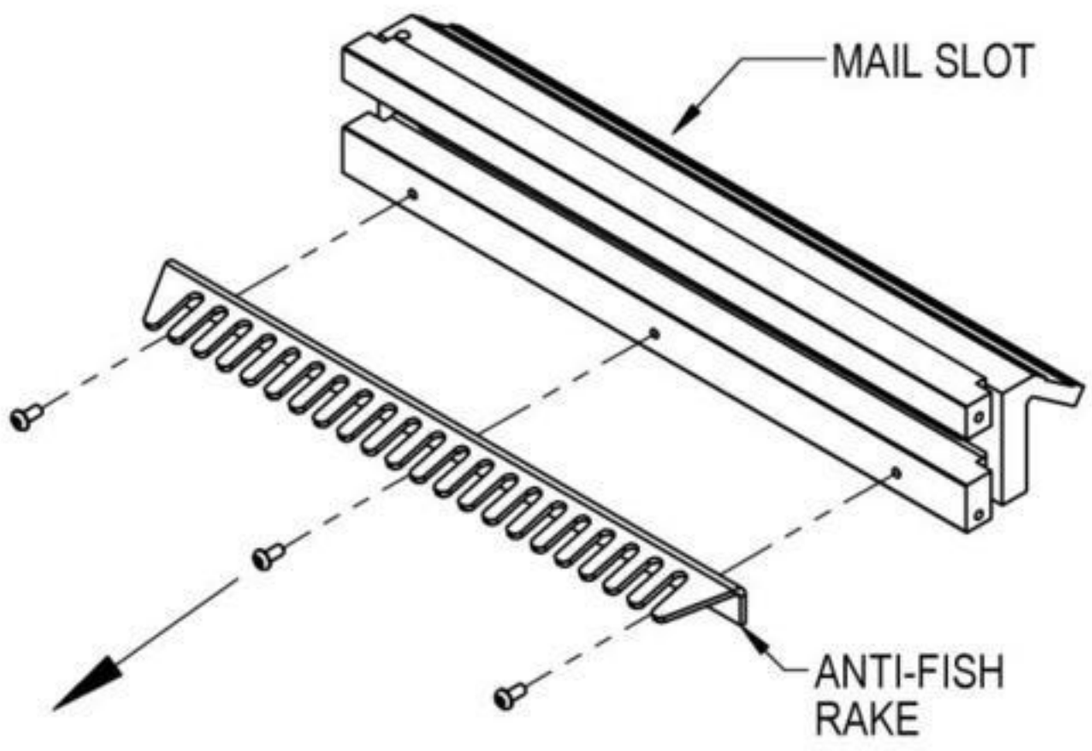

STEP 2: INSTALL OUTGOING MAIL SLOT PLUG

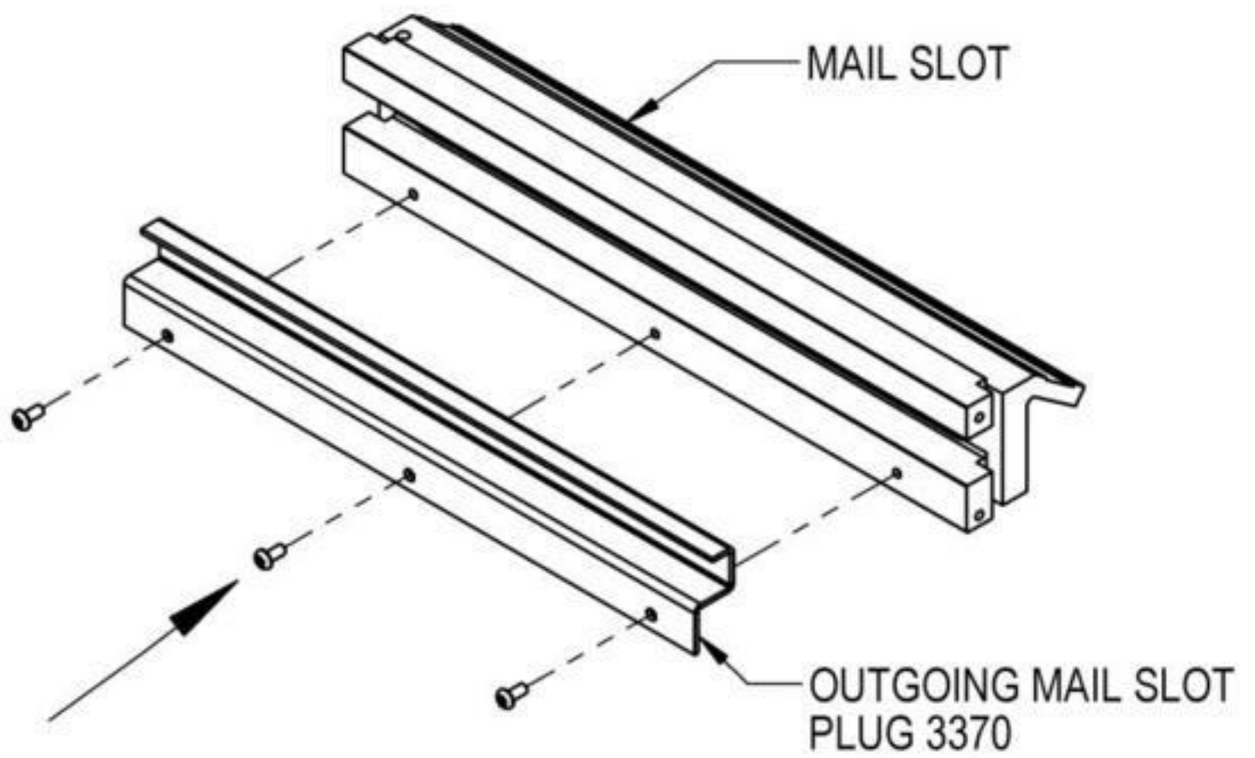

4C INSTALLATION – 3470/3770

STEP 1: REMOVE ANTI-FISH RAKE

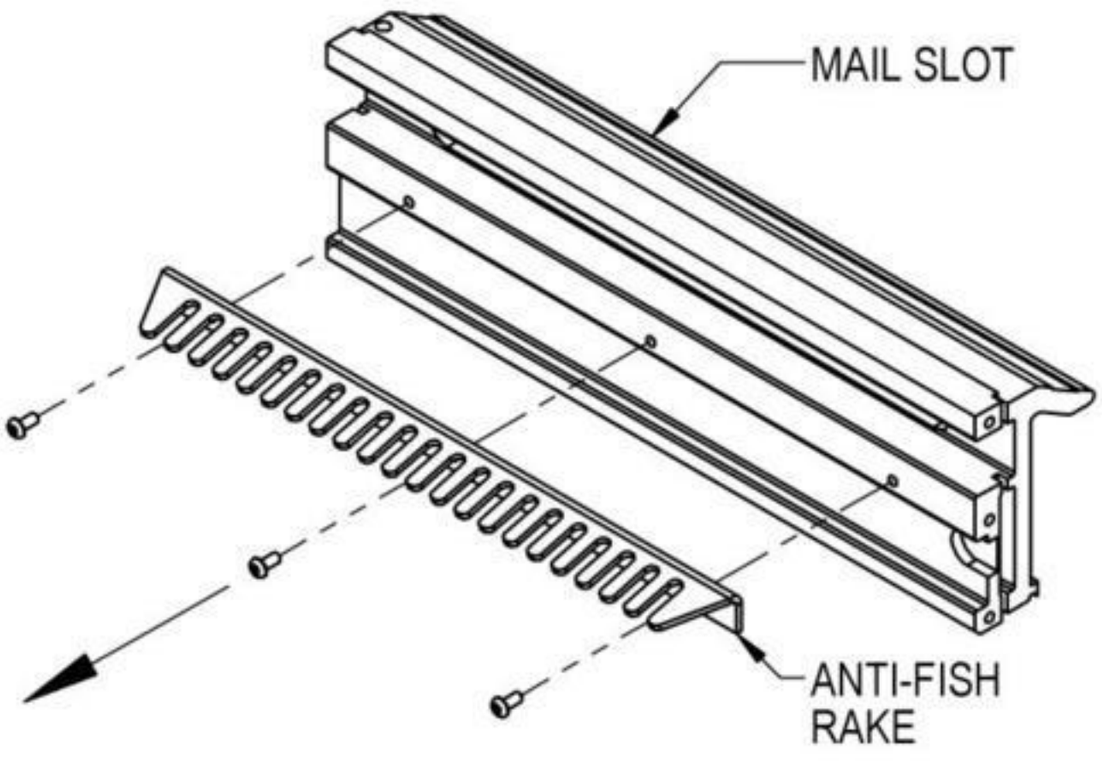

STEP 2: INSTALL OUTGOING MAIL SLOT PLUG

