Mail Slots – 4085
Vertical Style Installation Instructions

Thank you for selecting Salsbury's vertical mail slot model 4085. The one piece mail slots are made of brass and can be mounted vertically or horizontally.

Installation

1. Position slot on flat surface in center of door at desired height and mark two screw holes and four circle centers for the rough opening.

2. Using 1/2" drill bit, drill four circle centers from front of door to a depth that allows drill bit tip to penetrate back of door, then finish hole by drilling from back of door. Mark horizontal and vertical dotted cut-out lines of rough opening from hole to hole.

3. Use a saw to cut out opening along dotted cut-out lines.

4. Make sure slot is level and centered over opening in outside of door. Ensure that the flap can be opened and closed freely. Mark screw holes and drill two 1/4" through holes and secure.

Cleaning

Polish with a soft cloth or sponge.
DO NOT use abrasive materials on polished cast brass surfaces.

Model 4085 – Vertical Mail Slot

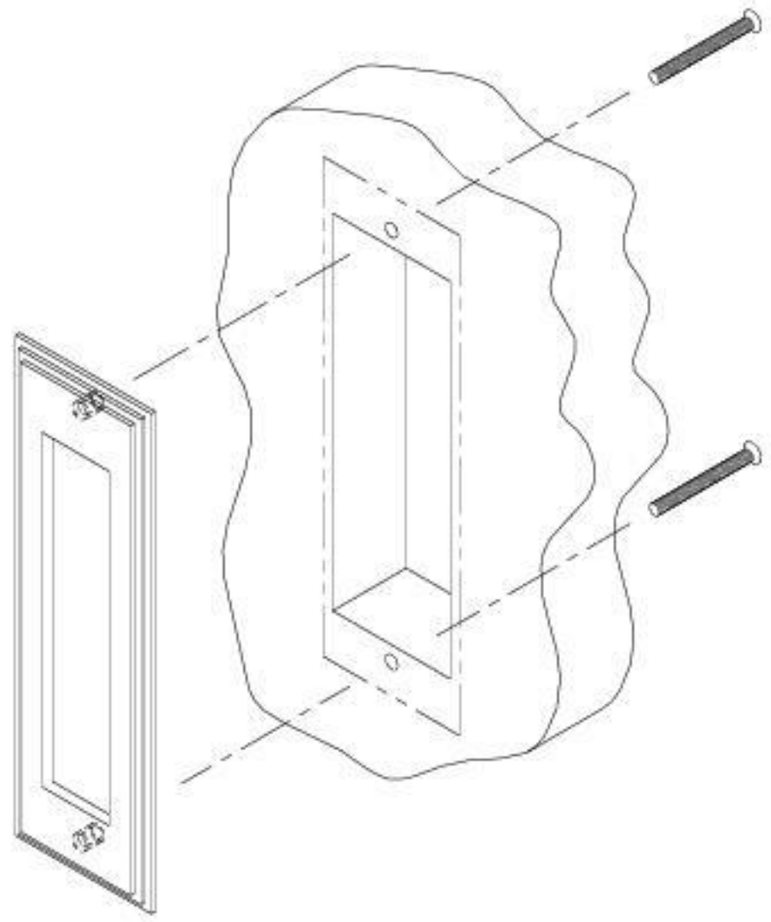

Unit Overall Dimensions
3-1/2"W x 11"H

Rough Opening Dimensions
3"W x 8-1/4"H