Mail Slots – 4035 and 4045
Standard Style Installation Instructions

Thank you for selecting Salsbury's standard mail slot model 4035 or 4045. The two piece standard mail slots are made of brass and have a spring-loaded flap for the front of a wall or door and inside trim for the rear.

Installation

The 4035 is attached with two (2) screws from the front and two (2) screws from the back, while the 4045 is attached with four (4) screws from the front and four (4) screws from the back.

The front screws in the 4035 are concealed from view by the mail flap. The front flap of the 4035 must be raised to mark the front screw holes. The flap of both the 4035 and the 4045 must be raised to mark the rough opening corner circle centers.

1. Position unit on flat surface in center of door at desired height and mark two (2) or four (4) screw holes and four (4) corner circle centers for the rough opening. The circle centers should be 1/4" inside the horizontal and vertical edges of the front plate opening under the flap.

2. Using 1/2" drill bit, drill four (4) circle centers from front of door to a depth that allows drill bit tip to penetrate back of door, then finish hole by drilling from back of door. Mark horizontal and vertical cut-out lines of rough opening from hole to hole.

3. Using a saw, cut out opening along dotted cut-out lines. Cut notches in the two (2) upper corners, if necessary, to clear the ends of the flap hinge pin.

4. Position front plate and make sure it is level and centered over rough opening on outside of door. Ensure that the flap can be lifted and closes freely. Mark screw holes and drill 1/8" pilot holes approximately 1/2" deep. Secure front plate with screws.

5. Position inside trim plate and drill pilot holes for screws with 1/8" drill bit approximately 1/2" deep. Secure inside trim with screws.

Cleaning

Polish with a soft cloth or sponge. **DO NOT** use abrasive materials on polished cast brass surface.

Model 4035 – Letter Size

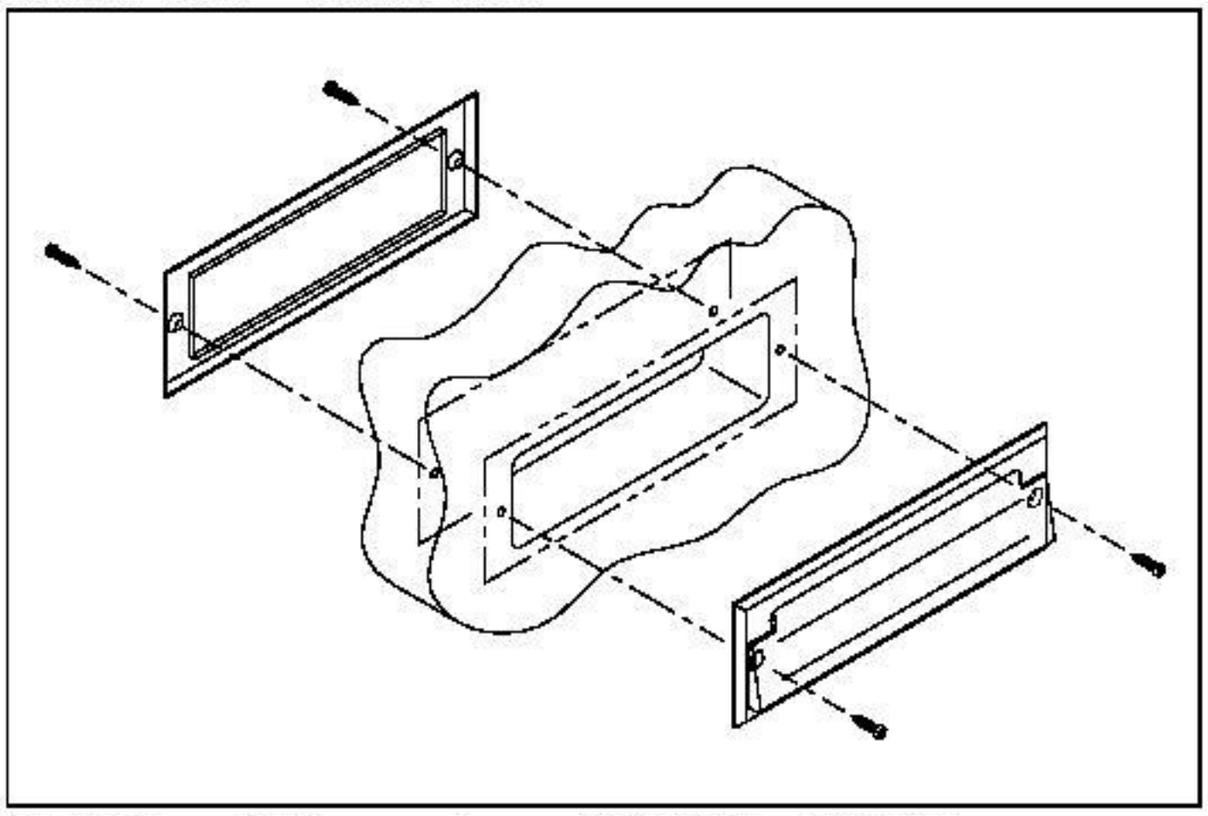

Unit Overall Dimensions: 8-3/4"W x 2-7/8"H
Rough Opening Dimension: 6-7/8"W x 1-3/4"H

Model 4045 – Magazine Size

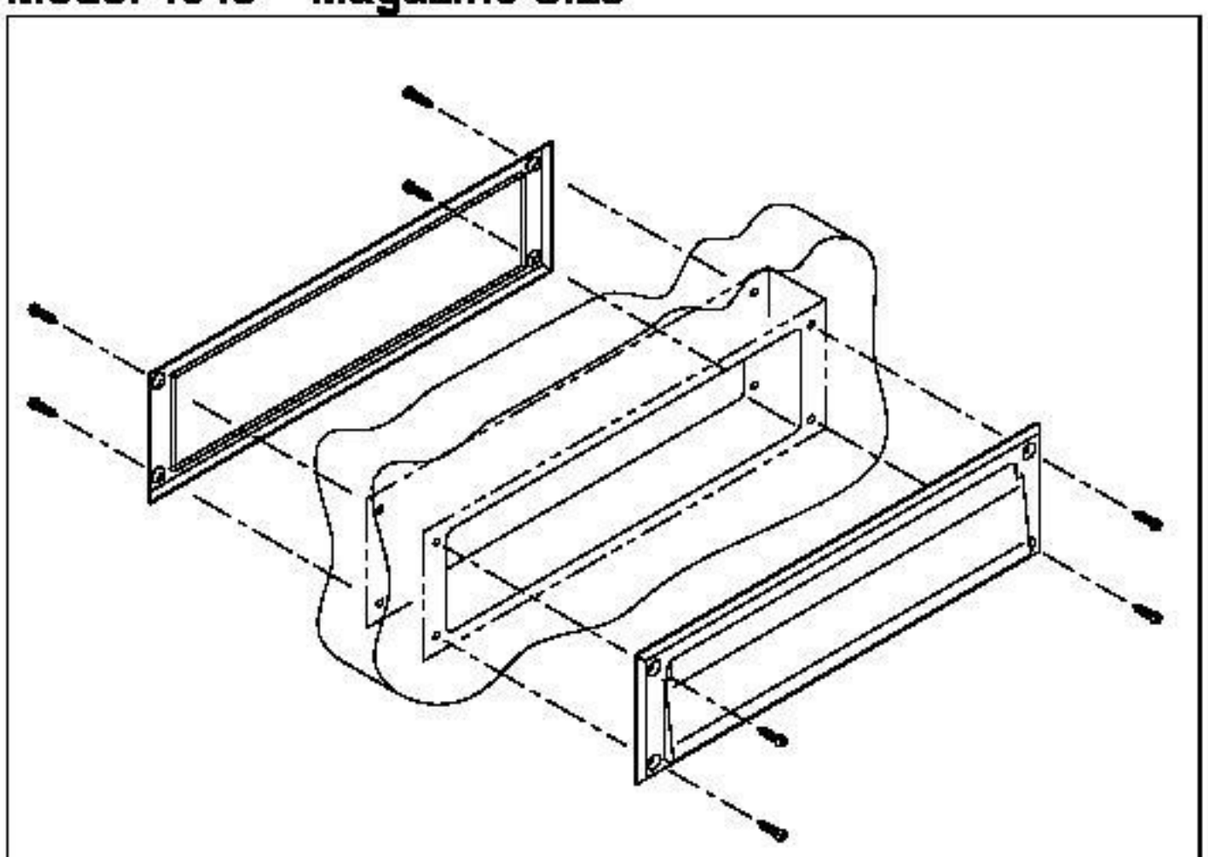

Unit Overall Dimension: 13"W x 3-1/2"H
Rough Opening Dimensions: 11-1/4"W x 2-1/2"H