Mail Houses – 4750
Post Mounting Installation Instructions

Made of electro-galvanized steel sheet with a durable powder coat finish and a stainless steel mail flap, Salsbury 4750 mail houses will provide years of maintenance free service.

Mounting Mail House on a Post

This instruction sheet is for installing the 4750 mail house on a Salsbury standard mailbox post. Other installation instructions are available for mounting the post in a concrete footing or mounting the unit to a wall.

The top plate of the standard mailbox post has four tapped holes. There are four 5/16" hex washer head bolts provided with the post to attach the mailbox to the post. Open the locked front door and install the four hex washer head bolts through the four holes in the inside floor of the mailbox to the top plate of the standard mailbox post.

4750 Mail House

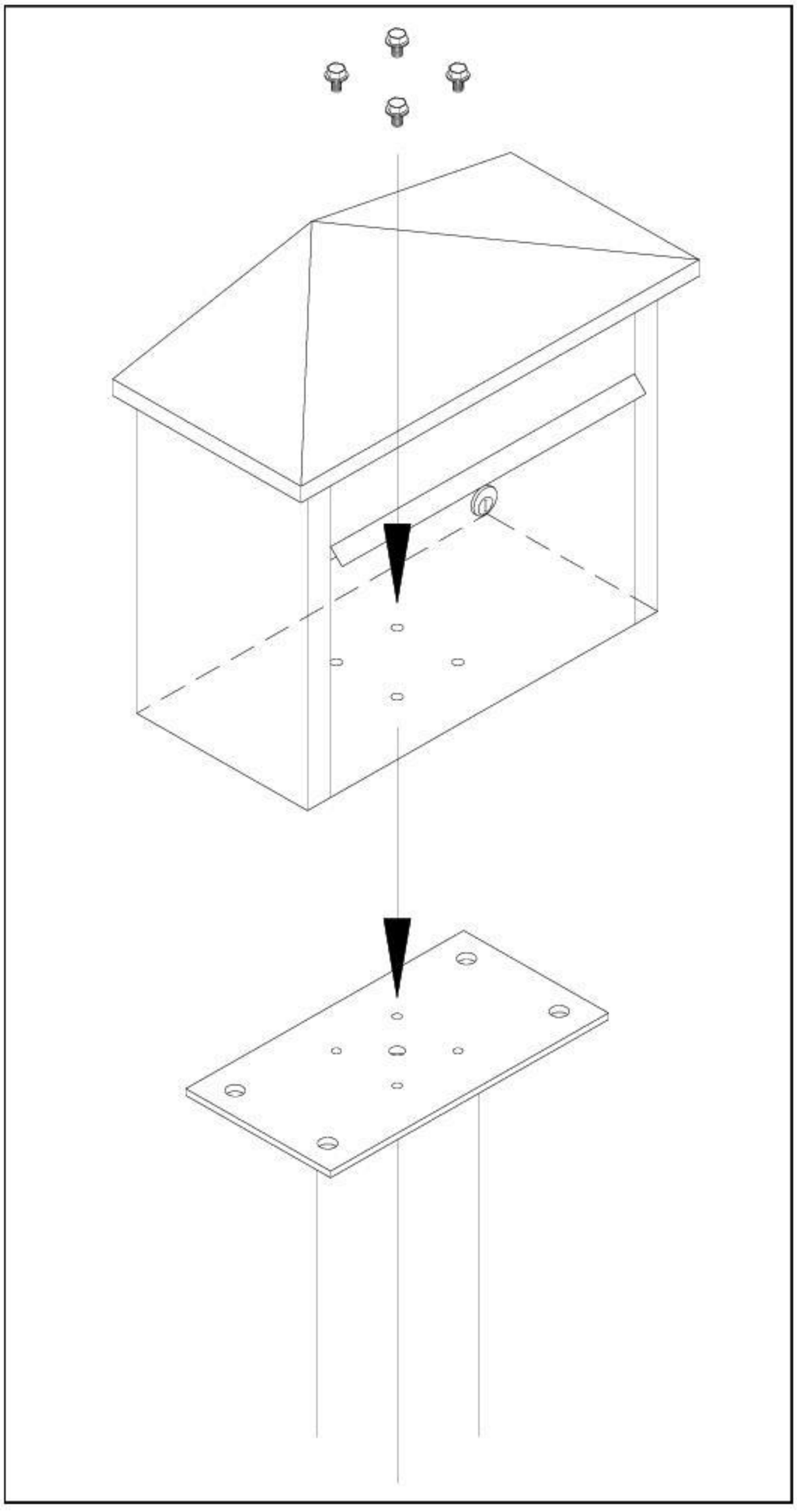

Mail Houses – 4750

In-Ground Mounted Post Installation Instructions

Installing the In-Ground Post Directly into Concrete

Dig the hole for the concrete footing and prepare the concrete. You will need approximately 4-1/2 cubic feet. The top surface of the footing should be about 12" by 18" and extend 36" into the ground. See the illustration for the relative position of the rectangular footing to the post and mailbox. The bottom of the hole for the concrete footing should be filled with about 6" of gravel to promote drainage under the post. The top of the footing should be sloped for water runoff.

The concrete must be below the frost line. Otherwise the post will move when the ground freezes. Be careful not to puncture water, sewer, or gas lines when digging holes for footing.

Set the post in the hole and fill the hole with the prepared concrete mix. Prod the mix with a stick while filling to reduce any air pockets. If you want to conceal the concrete, pour it to within a few inches of the top of the hole and cover with soil after the concrete has set. Use a carpenter's level on the sides of the post to ensure that the post is aligned vertically. Periodically check the vertical alignment of the post as the concrete is curing.

