Mail Houses – 4750
Post Mounting Installation Instructions

Made of electro-galvanized steel sheet with a durable powder coat finish and a stainless steel mail flap, Salsbury 4750 mail houses will provide years of maintenance free service.

Mounting Mail House on a Post

This instruction sheet is for installing the 4750 mail house on a Salsbury standard mailbox post. Other installation instructions are available for mounting the post in a concrete footing or mounting the unit to a wall.

The top plate of the standard mailbox post has four tapped holes. There are four 5/16" hex washer head bolts provided with the post to attach the mailbox to the post. Open the locked front door and install the four hex washer head bolts through the four holes in the inside floor of the mailbox to the top plate of the standard mailbox post.

4750 Mail House

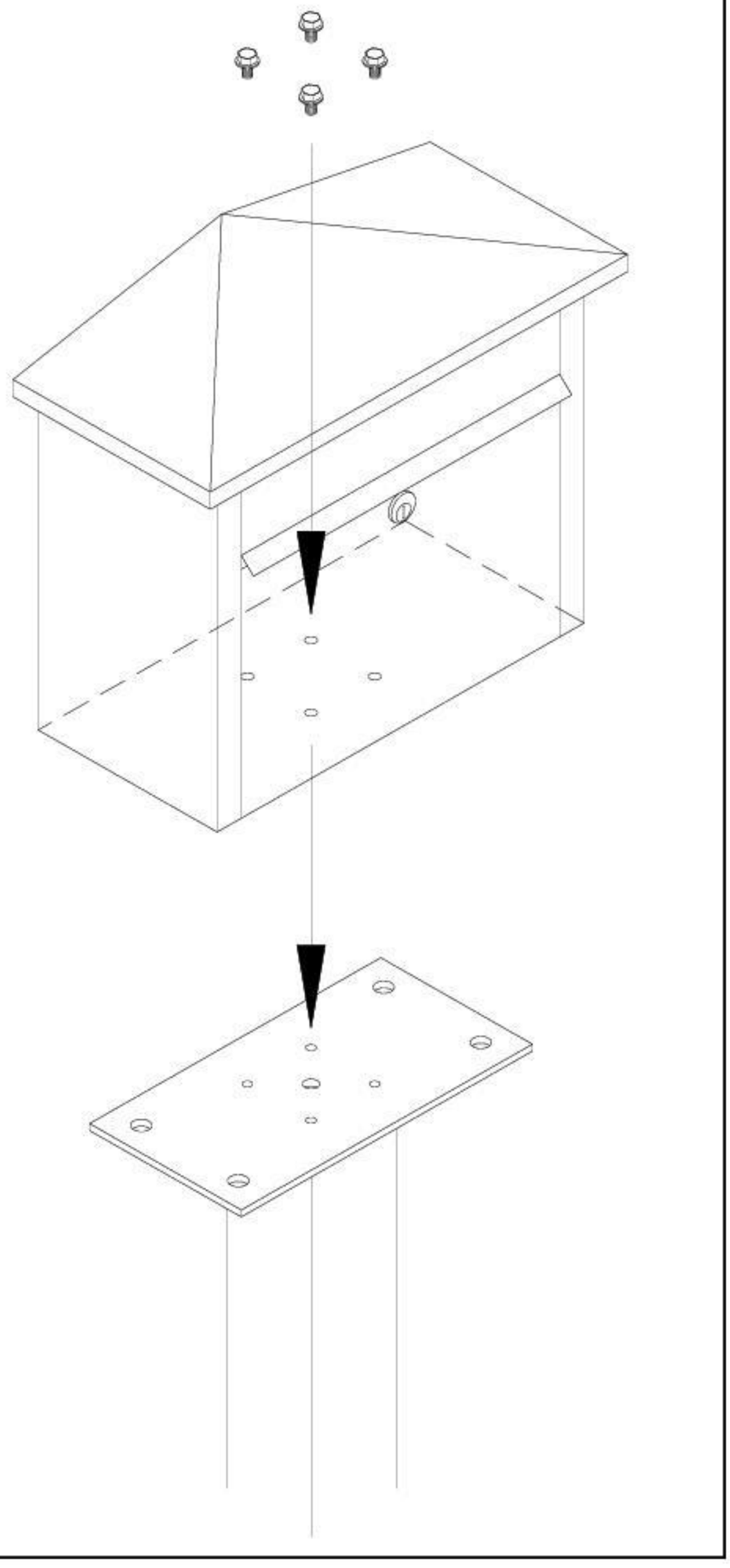

Mail Houses – 4750

Bolt Mounted Post Installation Instructions

U.S.P.S. APPROVED

Installing the Bolt Mounted Mailbox Post

When you install a curbside mail house mailbox, make sure that it is easily accessible to the mail carrier. By regulation it should be 41" to 45" from the ground or street surface up to the inside floor of the mailbox. The door should be set back 6" to 8" back from the front face of the curb or the road edge. However, you should check with your local postmaster to ensure that the mailbox is installed according to local regulations.

To install the bolt mounted mail house mailbox post, begin by digging a hole for the concrete footing and then prepare the concrete. The top surface of the footing should be about 12" by 18". See the illustration for the relative position of the rectangular footing to the post and mailbox. The concrete should extend into the ground 24" or greater if your local frost line is deeper. Installing the concrete below the frost line will prevent movement during ground freezing and thawing. The bottom of the hole for the concrete footing should be filled with a depth of about 6" of gravel to promote drainage under the post. The top of the footing should be sloped for water runoff.

When digging the hole for the footing, be careful to not puncture water, sewer, or gas lines.

Hardware for attaching the pedestal to the concrete footing is not included. J-bolts are shown in the illustration as an example. The concrete footing should include reinforcing steel and four (4) 1/2" anchor studs protruding at least 1" above the concrete surface. Place the anchor studs in a 4" x 10" pattern in the concrete to align with the holes in the pedestal base.

When the concrete has cured sufficiently, install four (4) leveling nuts on the anchor studs. Set the pedestal on the leveling nuts with the four (4) anchor studs protruding through the holes in the pedestal base plate. Adjust the leveling nuts to square up the pedestal. Install four (4) nuts and washers on the anchor studs and tighten securely.

