Mail Houses – 4750
Wall Mounted Installation Instructions

Made of electro-galvanized steel sheet with a durable powder coat finish and a stainless steel mail flap, Salsbury 4750 mail houses will provide years of maintenance free service.

Mounting Mail House to a Flat Wall

1. The installation fasteners are not provided due to the variation in wall types to which the mailbox might be mounted. Select fasteners and anchors appropriate for the type of wall.

2. Mounting access is provided by opening the mail flap and mail access door.

3. Where possible, it is best to shield the mailbox from direct weather conditions.

4. Contact your local U.S.P.S. office for the required height of the mailbox on the wall.

5. Using the template provided, mark the location of the 4 holes on the back of the mailbox. Drill the 4 mounting holes as marked.

6. Holding the mailbox aligned horizontally in the mounting position, mark on the wall the position of the 4 mounting holes in the back wall of the mailbox.

7. Attach the mailbox to the wall using the appropriate fasteners.

Note: Mounting holes are not pre-drilled into the Mail House as this unit can be installed on a mailbox post.

Cleaning

Interior & Painted Exterior – Using a soft cloth or sponge, clean the interior and painted exterior of the mailbox with liquid soap, detergent, or diluted water-soluble household cleaners. Completely remove residue of any cleaning products with water, and thoroughly dry with a clean cloth or paper towel.

Stainless Steel Mail Flap – The mail flap may be cleaned as indicated above. Be sure to scrub and polish satin finish materials in the same direction as the grain of the stainless steel. **DO NOT** use abrasive materials on stainless steel surfaces.

4750 Mail House

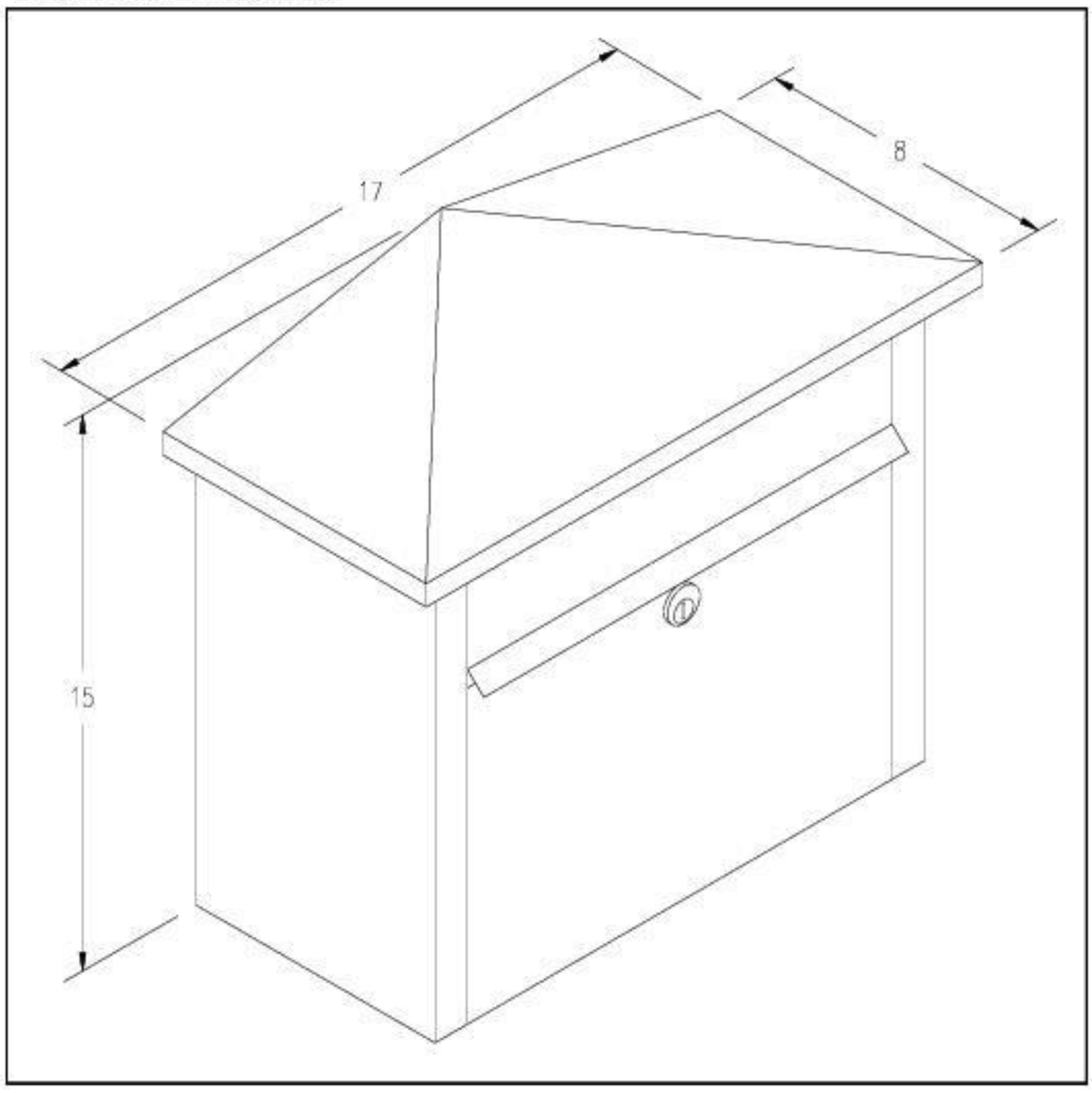

4750 Mounting Dimensions

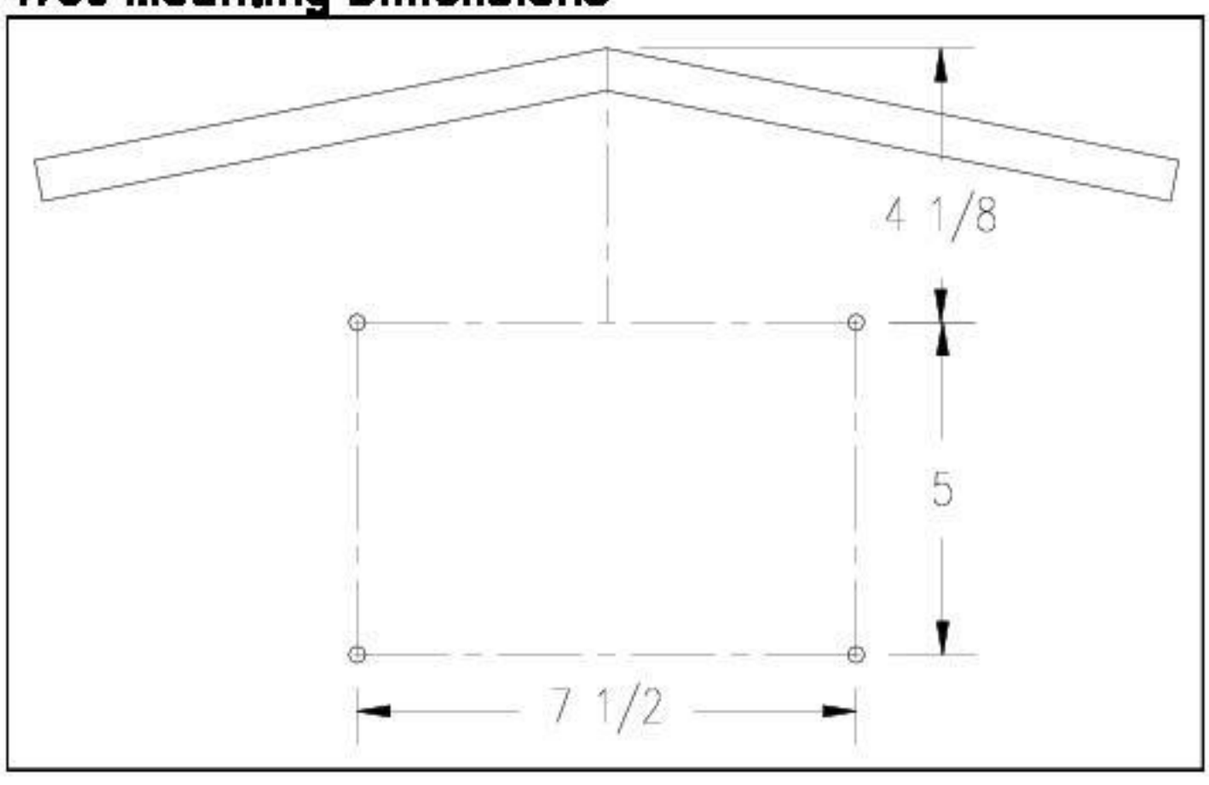

Mail Houses – 4750
Post Mounting Installation Instructions

Made of electro-galvanized steel sheet with a durable powder coat finish and a stainless steel mail flap, Salsbury 4750 mail houses will provide years of maintenance free service.

Mounting Mail House on a Post

This instruction sheet is for installing the 4750 mail house on a Salsbury standard mailbox post. Other installation instructions are available for mounting the post in a concrete footing or mounting the unit to a wall.

The top plate of the standard mailbox post has four tapped holes. There are four 5/16" hex washer head bolts provided with the post to attach the mailbox to the post. Open the locked front door and install the four hex washer head bolts through the four holes in the inside floor of the mailbox to the top plate of the standard mailbox post.

4750 Mail House

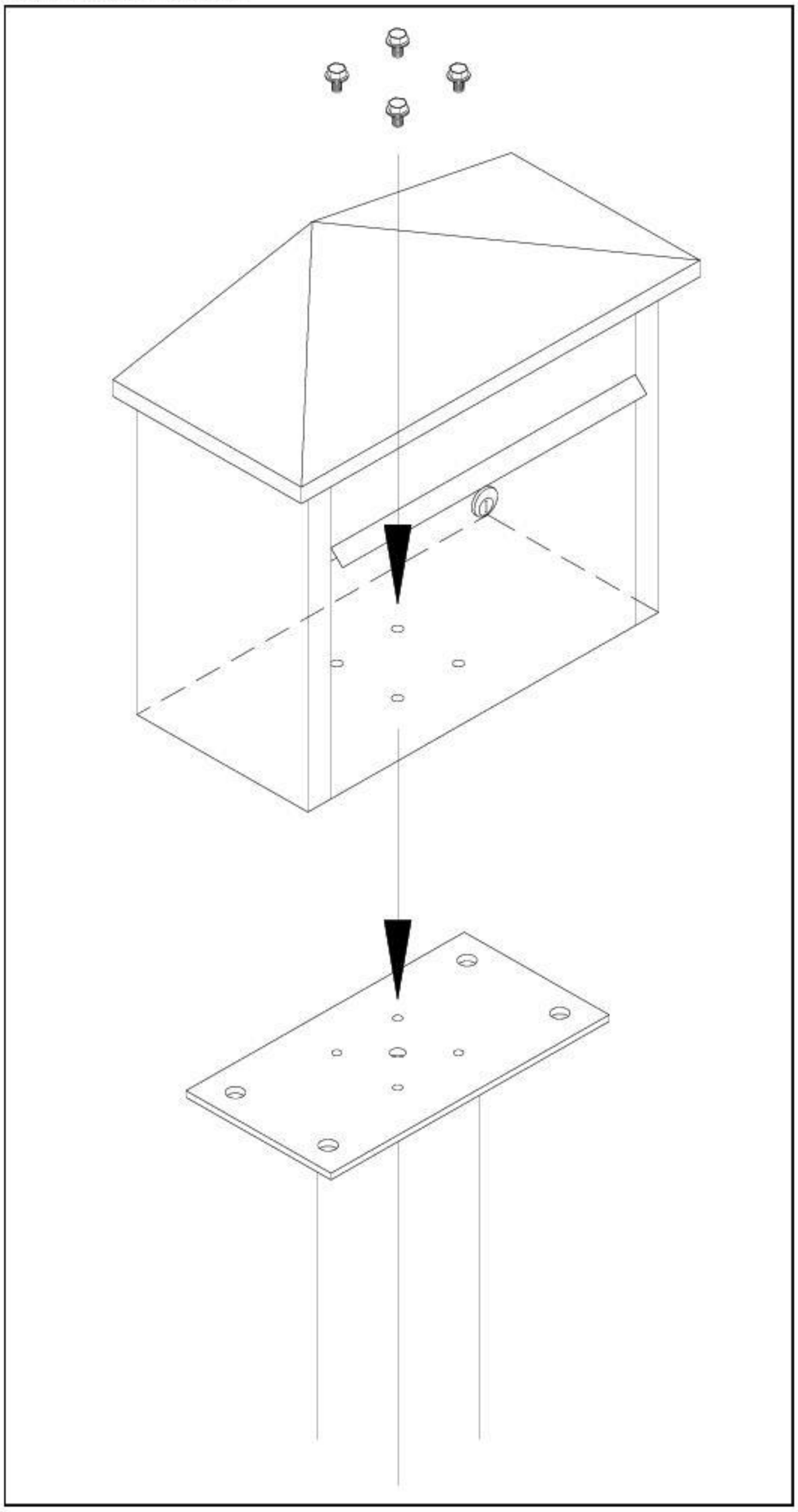

Mail Houses – 4750

In-Ground Mounted Post Installation Instructions

Installing the In-Ground Post Directly into Concrete

Dig the hole for the concrete footing and prepare the concrete. You will need approximately 4-1/2 cubic feet. The top surface of the footing should be about 12" by 18" and extend 36" into the ground. See the illustration for the relative position of the rectangular footing to the post and mailbox. The bottom of the hole for the concrete footing should be filled with about 6" of gravel to promote drainage under the post. The top of the footing should be sloped for water runoff.

The concrete must be below the frost line. Otherwise the post will move when the ground freezes. Be careful not to puncture water, sewer, or gas lines when digging holes for footing.

Set the post in the hole and fill the hole with the prepared concrete mix. Prod the mix with a stick while filling to reduce any air pockets. If you want to conceal the concrete, pour it to within a few inches of the top of the hole and cover with soil after the concrete has set. Use a carpenter's level on the sides of the post to ensure that the post is aligned vertically. Periodically check the vertical alignment of the post as the concrete is curing.

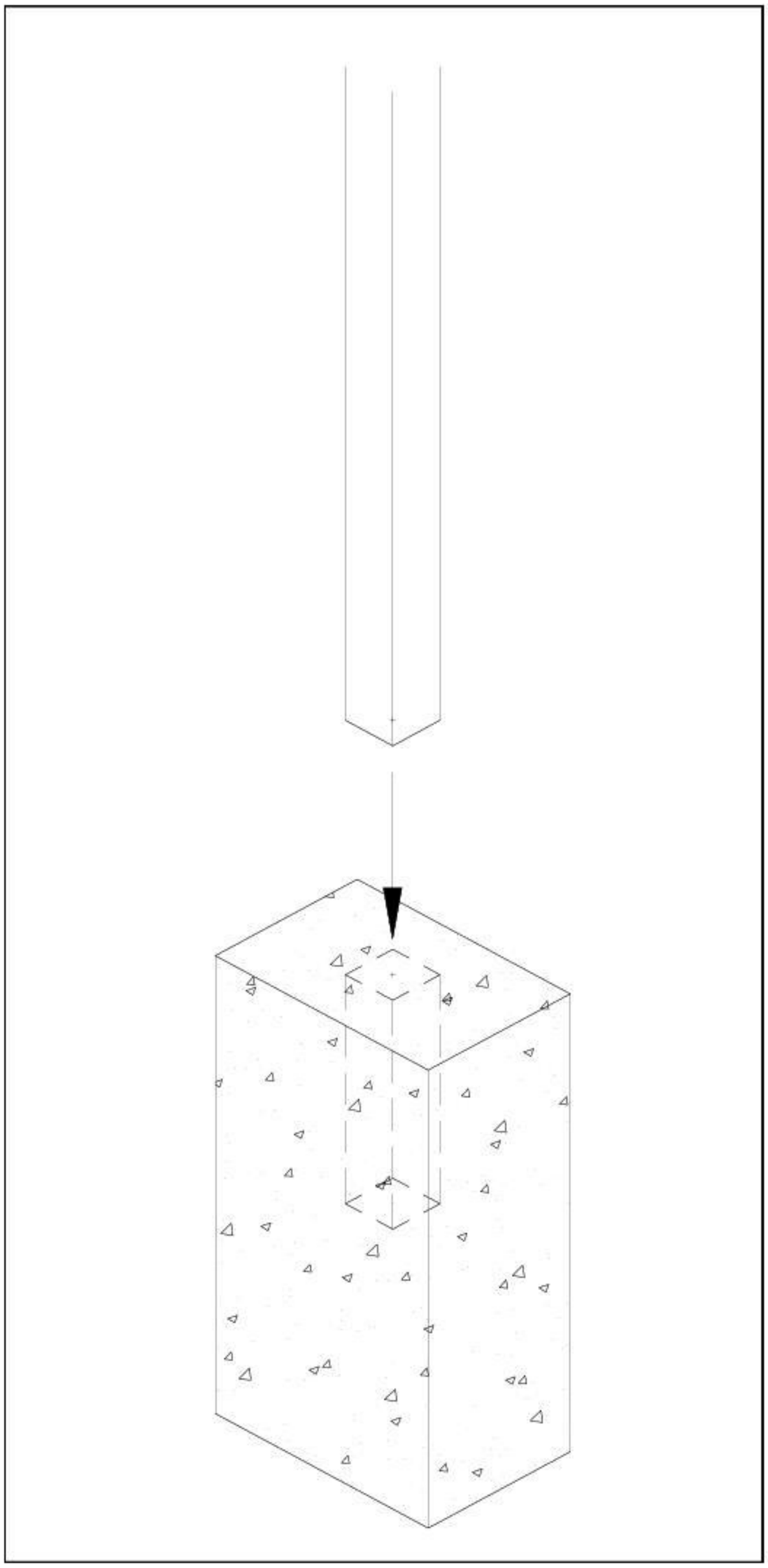

Mail Houses – 4750

Bolt Mounted Post Installation Instructions

Installing the Bolt Mounted Post onto Anchor Bolts

Dig the hole for the concrete footing, and prepare the concrete. You will need approximately 4-1/2 cubic feet. The top surface of the footing should be about 12" by 18" and extend 36" into the ground. See the illustration for the relative position of the rectangular footing to the post and mailbox. The bottom of the hole for the concrete footing should be filled with about 6" of gravel to promote drainage under the post. The top of the footing should be sloped for water runoff.

The concrete must be below the frost line. Otherwise the post will move when the ground freezes. Be careful not to puncture water, sewer, or gas lines when digging holes for footing.

Four (4) 1/2"-13 by 8" long J-shaped anchor bolts and eight (8) 1/2"-13 nuts are provided. Attach the anchor bolts to the base of the post with four (4) nuts under and four (4) nuts over the bottom mounting plate. Pour the concrete into the hole, prodding the mix with a stick while filling to reduce any air pockets. Press the anchor bolts on the bottom of the post into the concrete until the bottom plate is resting on the top surface of the wet concrete. Use a carpenter's level on the sides of the post to ensure that the post is aligned vertically. Periodically check the vertical alignment of the post as the concrete is curing.

The concrete will shrink as it hardens, leaving a space between the anchor and the concrete when it is cured. To prevent this, loosen the top bolt one full turn prior to inserting into the wet concrete. After the anchor is inserted into the wet concrete, place your foot on the top of the threaded anchor and push down until the top nut is pressed against the anchor plate. After the concrete has hardened, re-tighten the top bolt.

