Mail Drops – 2255
Installation Instructions

Thank you for selecting Salsbury's Mail Drop 2255. With its rugged 20 gauge steel construction, 1/4" thick aluminum front panel & flap and a durable powder coated finish, Salsbury's 2255 Mail Drop will provide years of maintenance free service.

Model 2255 Mail Drop

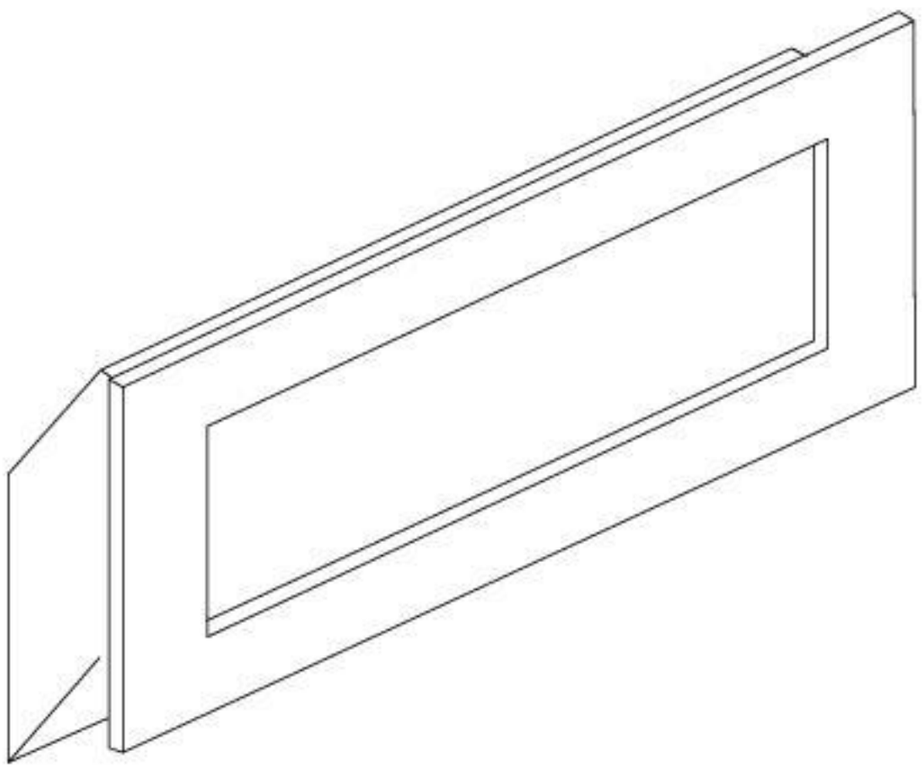

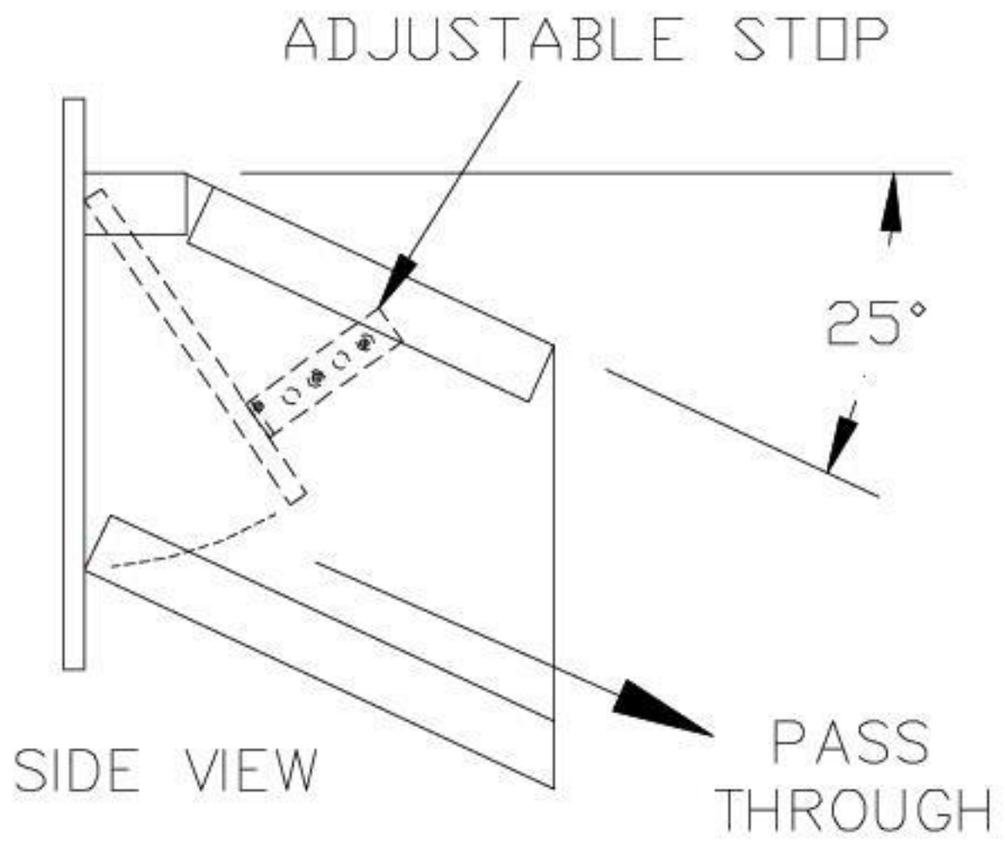

Note: A receptacle (#2256) is sold separately.

#2255 Overall Dimensions: 14"W x 7"H x 6"D

#2255 Rough Opening Dimensions: 12-1/4"W x 5-1/2"H

1. Hold unit up on wall at desired height.
2. Mark the unit's location on the wall. Cut out the rough opening in the wall (12-1/4"W x 5-1/2"H).
3. Frame the opening and replace any framing/blocking that has been cut.
4. Place unit in the opening and secure to the framing by drilling screws from the inside of the mail drop through the side of the walls and into the framing.