Mail Chests - 4350
Installation Instructions

U.S.P.S. APPROVED

Thank you for selecting Salsbury's 4350 aluminum mail chest. We are confident that the quality and construction of this product will provide years of maintenance free use.

Model 4350 Mail Chest

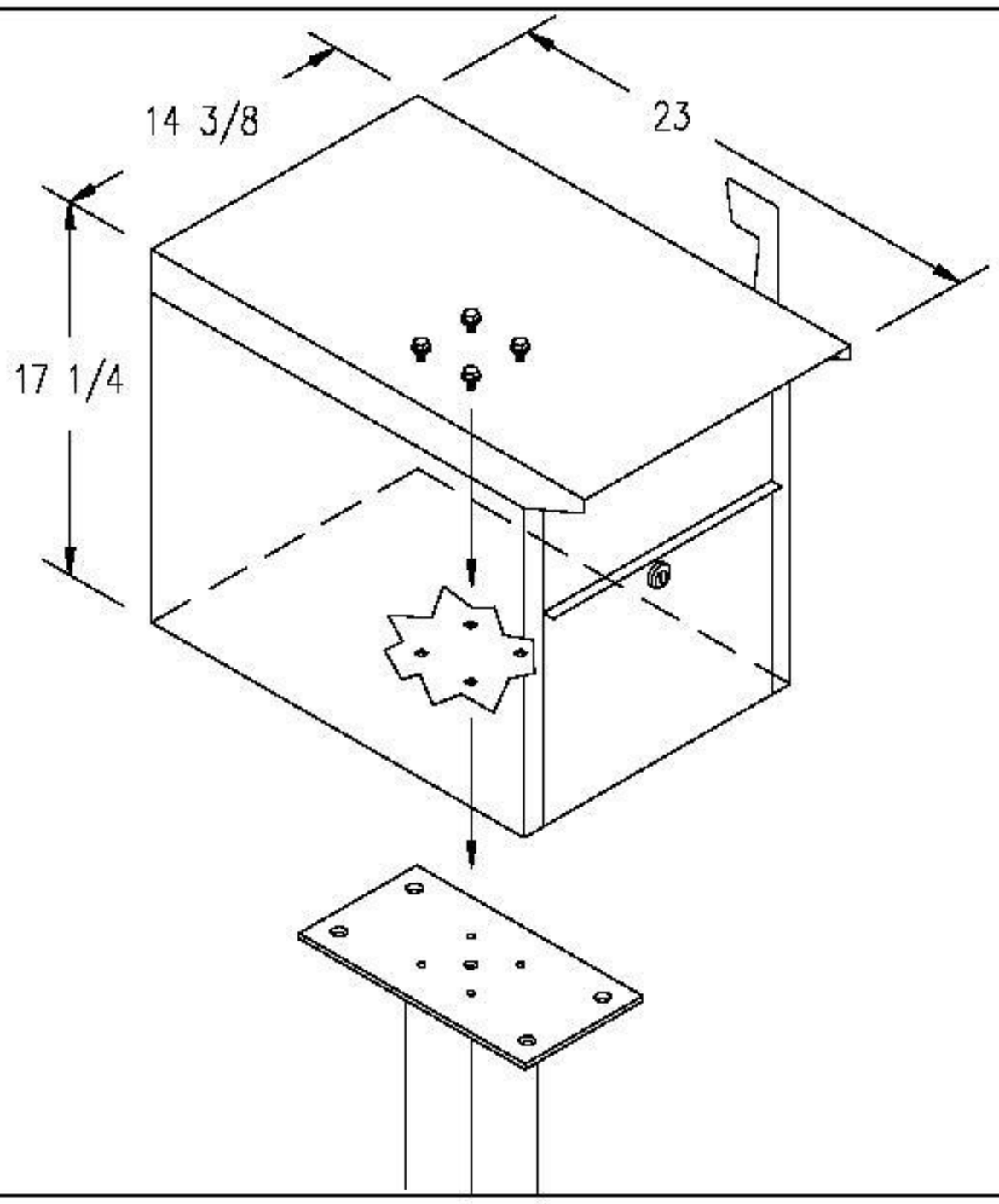

Installing Mail Chest Directly to a Pedestal

This instruction sheet is for installing the 4350 mail chest directly to a bolt-mounted or in-ground pedestal (ordered separately). Other installation instructions are available for installing the mail chests to a 2-wide spreader, a 3-wide spreader, or in a wall or column.

The mounting plate on the top of the pedestal has four tapped (threaded) holes. There are four 5/16" x 1" long hex washer head bolts provided to fasten the mail chest to the top of the pedestal.

Set the mail chest on the pedestal top plate and open the lower door of the mail chest. Install the hex washer head bolts through the mail chest holes into the four holes in the pedestal top plate. Make sure that the bolts are sufficiently tightened.

USPS Regulations

It is important to note that it is not the responsibility of mail carriers to open mailboxes that are locked, accept keys for this purpose, or lock mailboxes after delivery of the mail.

When you install a mailbox on a curbside or roadside, make sure that it is easily accessible to the mail carrier. Customers are required to contact the local post office before installing the mailbox to ensure its correct placement and height at the street. Generally, mailboxes are installed at a height of 41-45 inches from the road surface to the inside floor of the point of mail entry and are set back 6-8 inches from the front face of curb or road edge to the mailbox door.

Mail Chests - 4350
Wall Mount Installation Instructions

U.S.P.S. APPROVED

Thank you for selecting Salsbury's 4350 aluminum mail chest. We are confident that the quality and construction of this product will provide years of maintenance free use.

Model 4350 Mail Chest

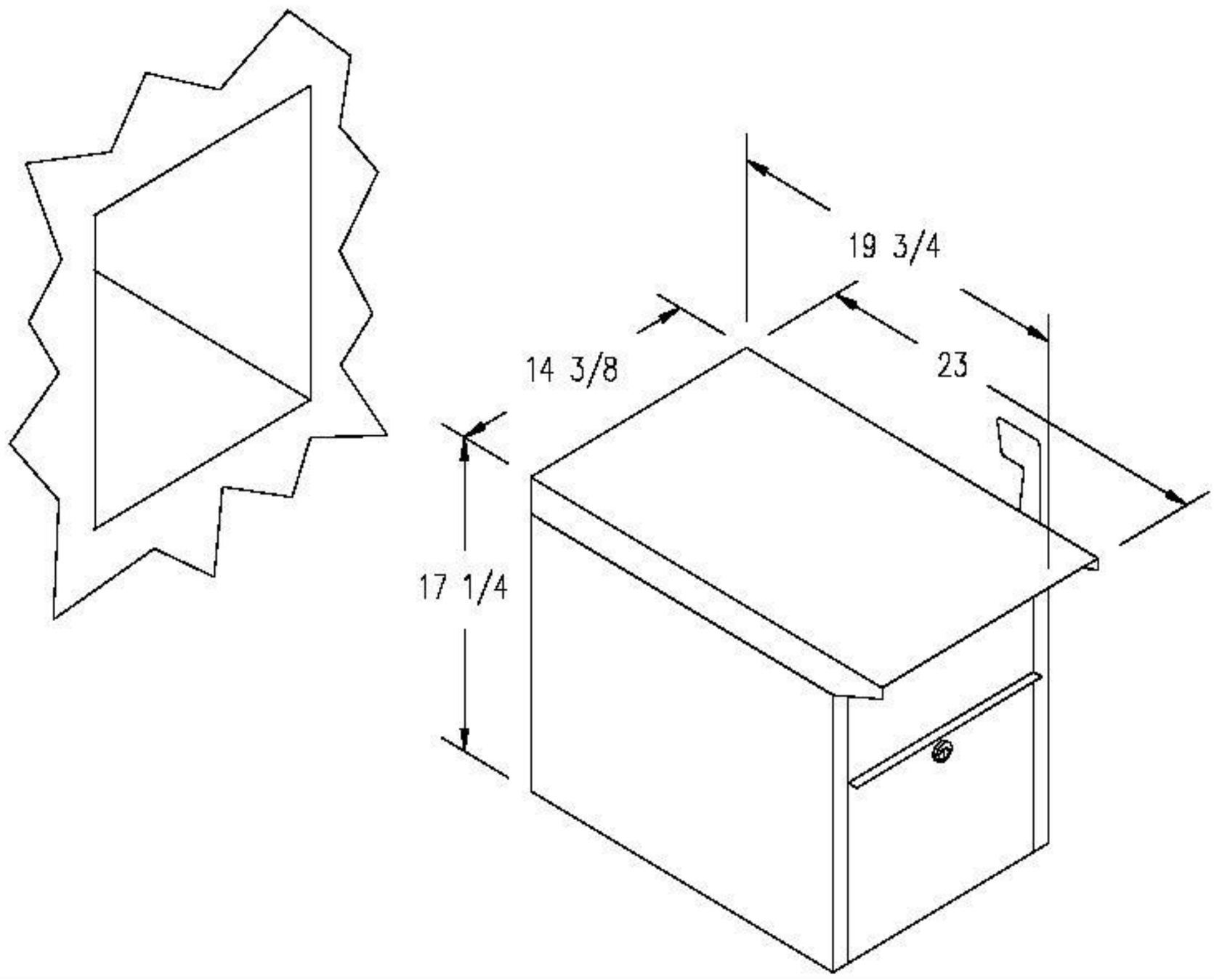

Installing Mail Chest in a Wall or Column

This instruction sheet is for installing the 4350 mail chest in a hole in a wall or column. Other installation instructions are available for installing the mail chests directly to a pedestal, on a 2-wide spreader, or on a 3-wide spreader.

It is recommended to have the unit present before starting the wall or column construction to obtain the best possible installation. The rough opening should be sized approximately 1/2" larger that the outside dimensions of the unit.

Due to construction variations and method of fastening the unit in the installation, the fastening hardware is not included. Choose fasteners that are appropriate for the construction method.

USPS Regulations

It is important to note that it is not the responsibility of mail carriers to open mailboxes that are locked, accept keys for this purpose, or lock mailboxes after delivery of the mail.

When you install a mailbox on a curbside or roadside, make sure that it is easily accessible to the mail carrier. Customers are required to contact the local post office before installing the mailbox to ensure its correct placement and height at the street. Generally, mailboxes are installed at a height of 41-45 inches from the road surface to the inside floor of the point of mail entry and are set back 6-8 inches from the front face of curb or road edge to the mailbox door.

Mail Chests - 4350

Newspaper Holder Installation Instructions

U.S.P.S. APPROVED

Installing Newspaper Holder under Mail Chest

Thank you for selecting Salsbury's 4350 mail chest. We are confident that the quality and construction of the mailbox will prove to be a good investment.

This instruction sheet is for installing the 4350 mail chest along with a 4315 newspaper holder. Other installation instructions are available for installing the mail chest on a standard post, installing the mail chest on spreaders, or installing the post in a concrete footing.

When you install a curbside or roadside mailbox, make sure that it is easily accessible to the mail carrier. By regulation it should be 41" to 45" from the ground or street surface up to the point of mail entry. The door should be set back 6" to 8" from the front face of the curb or the road edge. However, you should check with your local postmaster to ensure that the mailbox is installed according to local regulations.

The mail chest is fastened to the newspaper holder with four (4) 5/16" carriage bolts, washers, and nuts. The assembled mail chest and newspaper holder is then fastened to the standard post with the four (4) 5/16" hex washer head bolts included with the post.

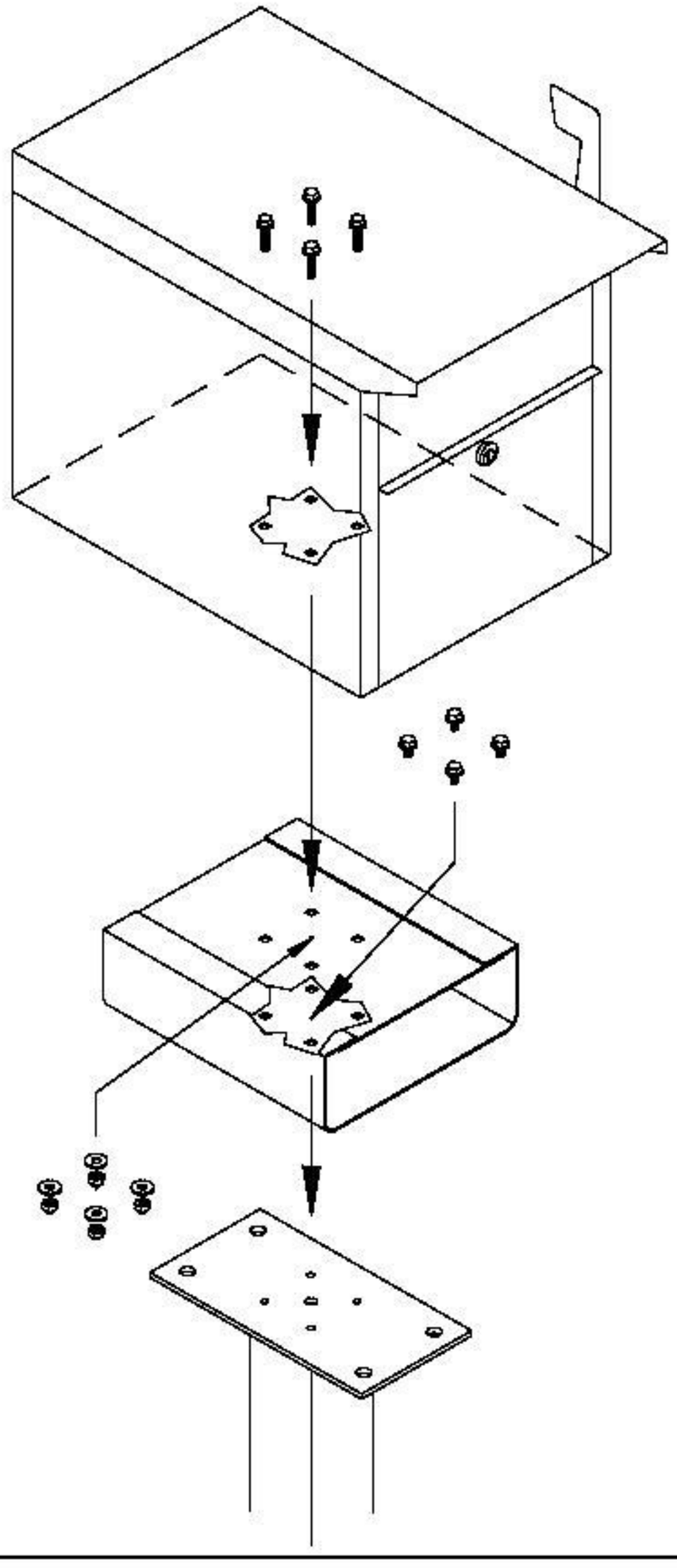

Mail Chests - 4350

2-Wide Spreader Installation Instructions

U.S.P.S. APPROVED

Thank you for selecting Salsbury's 4350 aluminum mail chest. We are confident that the quality and construction of this product will provide years of maintenance free use.

Model 4350 Mail Chests

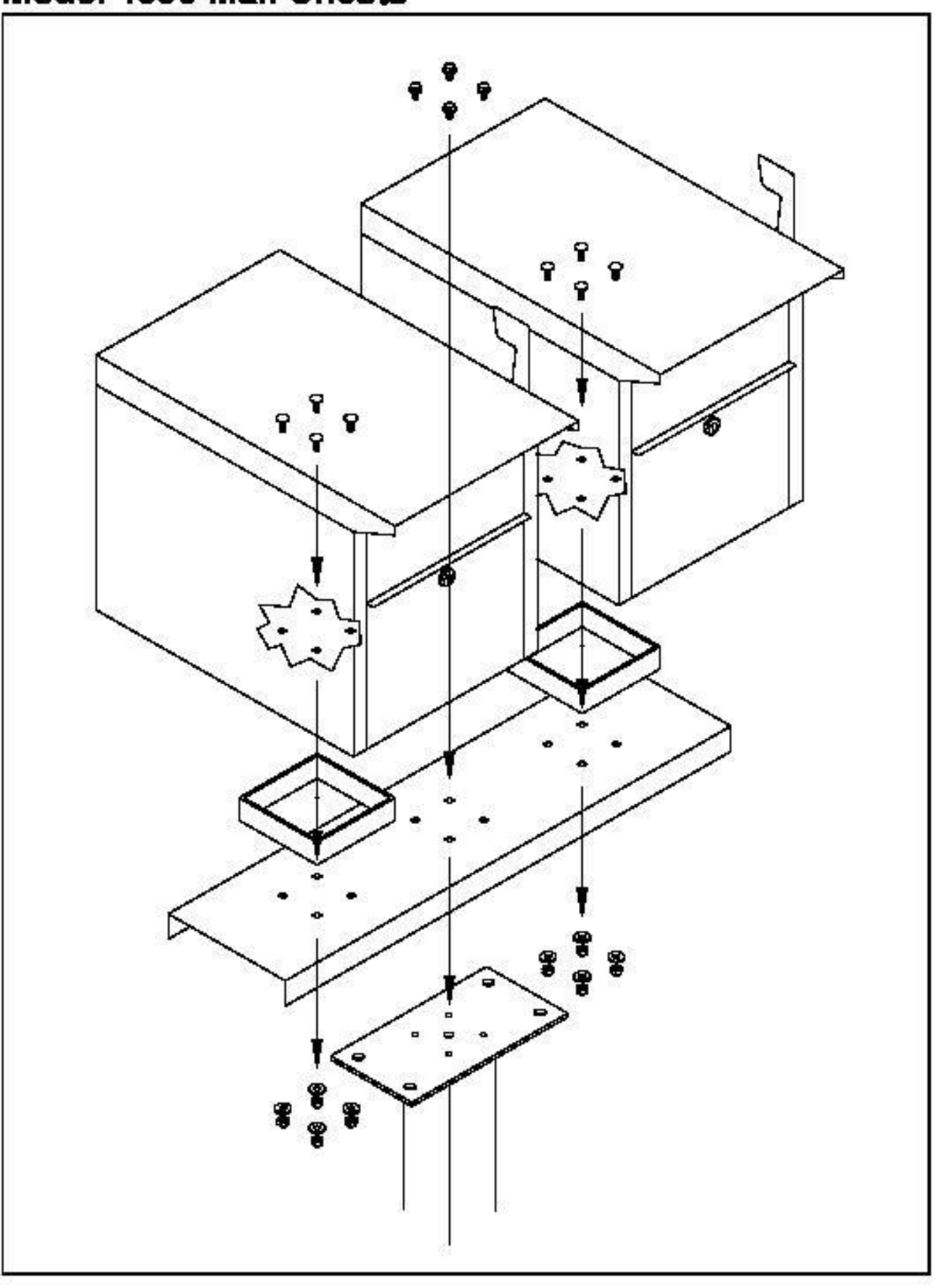

Installing 4350 Mail Chests on a 2-Wide Spreader

This instruction sheet is for installing two (2) 4350 mail chests on a 2-wide spreader on a standard bolt-mounted or in-ground mounted pedestal (ordered separately). Other installation instructions are available for installing the mail chests on a 3-wide spreader, direct to a pedestal, or in a wall or column.

The mounting plate on the top of the pedestal has four tapped (threaded) holes. There are four 5/16" x 1" long hex washer head bolts provided to fasten the spreader to the top of the pedestal. Four plastic bolt head covers are provided to protect the bolt heads.

The mail chests are each mounted to the spreader using a 1" thick x 4" square aluminum spacer, four 5/16" x 1-1/2" long carriage bolts, flat washers, and hex acorn nuts. Two of these kits are provided with the spreader, one for each of the mail chests.

Set a mail chest and square aluminum spacer in one of the positions on the spreader and open the lower door of the mail chest. Install the carriage bolts through the mail chest holes, through the square aluminum spacer, and through the four holes in the spreader. After assuring that the square shanks under the carriage bolt heads are securely in the square holes in the bottom of the mail chest, attach the flat washers and hex acorn nuts to the bottom of the bolts. Make sure the nuts are sufficiently tightened.

Repeat for the second 4350 mail chest.

USPS Regulations

It is important to note that it is not the responsibility of mail carriers to open mailboxes that are locked, accept keys for this purpose, or lock mailboxes after delivery of the mail.

When you install a mailbox on a curbside or roadside, make sure that it is easily accessible to the mail carrier. Customers are required to contact the local post office before installing the mailbox to ensure its correct placement and height at the street. Generally, mailboxes are installed at a height of 41-45 inches from the road surface to the inside floor of the point of mail entry and are set back 6-8 inches from the front face of curb or road edge to the mailbox door.

Mail Chests - 4350

3-Wide Spreader Installation Instructions

U.S.P.S. APPROVED

Thank you for selecting Salsbury's 4350 aluminum mail chest. We are confident that the quality and construction of this product will provide years of maintenance free use.

Model 4350 Mail Chests

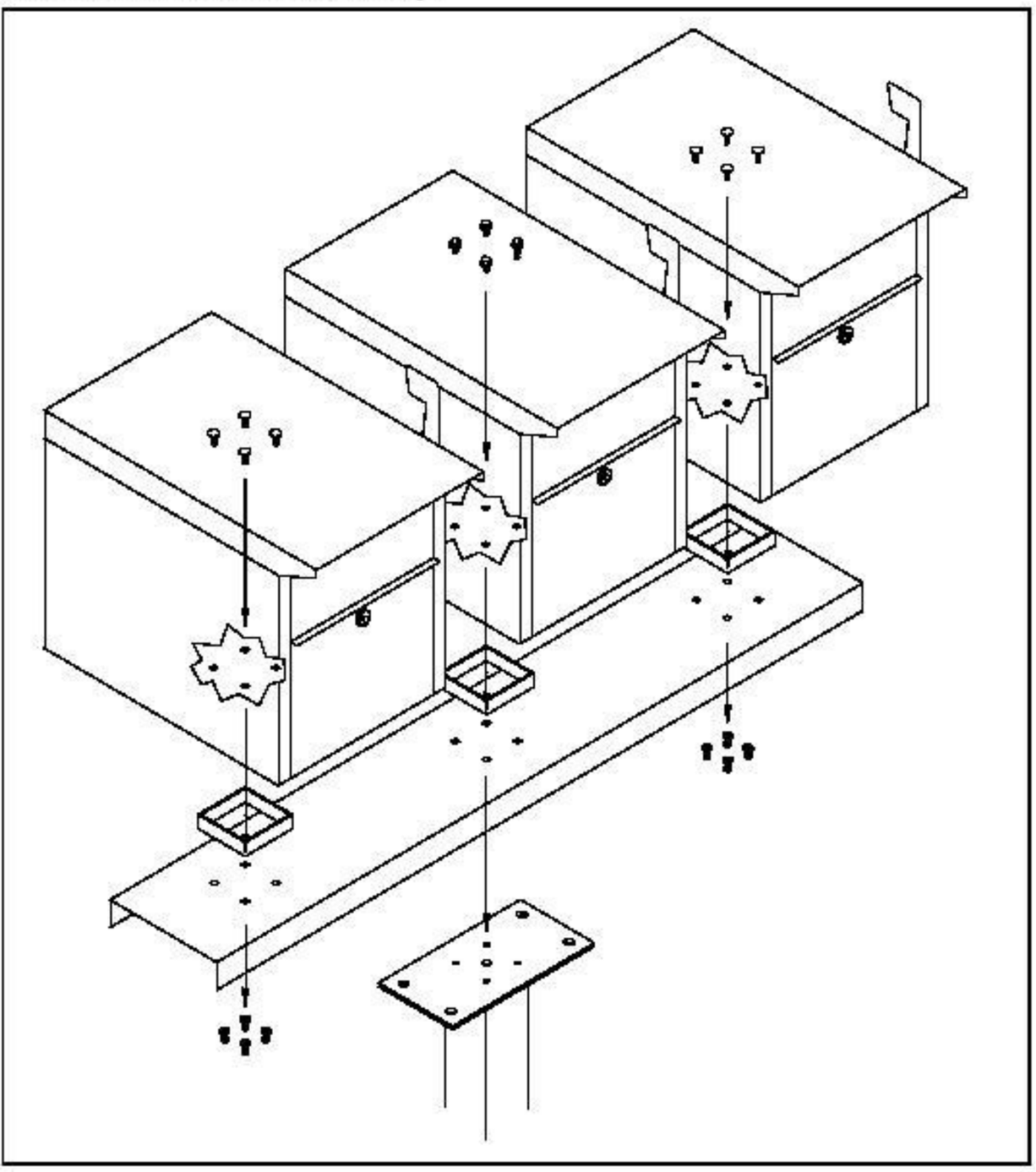

Installing 4350 Mail Chests on a 3-Wide Spreader

This instruction sheet is for installing three 4350 mail chests on a 3-wide spreader on a bolt-mounted or in-ground mounted pedestal (ordered separately). Other installation instructions are available for installing the mail chests on a 2-wide spreader, direct to a pedestal, or in a wall or column.

The mounting plate on the top of the pedestal has four tapped (threaded) holes. There are four 5/16" x 2" long hex washer head bolts and a 1" thick x 4" square aluminum spacer provided to fasten the middle mail chest and the spreader to the top of the pedestal. The square aluminum spacer goes between the mailbox and the spreader. Open the lower door of the mail chest and install the four bolts through the bottom of the mailbox, through the square aluminum spacer, and into the top plate of the pedestal. Make sure the bolts are sufficiently tightened.

The other two mail chests are each mounted to the spreader using four 5/16" x 1-1/2" long carriage bolts, a 1" thick x 4" square aluminum spacer, flat washers, and hex acorn nuts. Two of these kits are provided, one for each of the outboard mail chests.

Set a mail chest on one of the square aluminum spacers in one of the end positions on the spreader and open the lower door. Install the carriage bolts through the mail chest holes, through the square aluminum spacer, and through the four holes in the spreader. After assuring that the square shanks under the bolt heads are securely in the square holes in the bottom of the mail chest, attach the flat washers and hex acorn nuts to the bottom of the bolts. Make sure the nuts are sufficiently tightened.

Repeat for the remaining mail chest.

USPS Regulations

It is important to note that it is not the responsibility of mail carriers to open mailboxes that are locked, accept keys for this purpose, or lock mailboxes after delivery of the mail.

When you install a mailbox on a curbside or roadside, make sure that it is easily accessible to the mail carrier. Customers are required to contact the local post office before installing the mailbox to ensure its correct placement and height at the street. Generally, mailboxes are installed at a height of 41-45 inches from the road surface to the inside floor of the point of mail entry and are set back 6-8 inches from the front face of curb or road edge to the mailbox door.

Mail Chests - 4350

In-Ground Mount Pedestal Installation Instructions

U.S.P.S. APPROVED

Installing the In-Ground Mounted Post Into Concrete

When you install a curbside mailbox, make sure that it is easily accessible to the mail carrier. By regulation it should be 41" to 45" from the ground or street surface up to the inside floor of the mailbox. The door should be set back 6" to 8" back from the front face of the curb or the road edge. However, you should check with your local postmaster to ensure that the mailbox is installed according to local regulations.

Dig the hole for the concrete footing, and prepare the concrete. You will need approximately 4-1/2 cubic feet. The top surface of the footing should be about 12" by 18" and extend 36" into the ground. See the illustration for the relative position of the rectangular footing to the post and mailbox. The bottom of the hole for the concrete footing should be filled with about 6" of gravel to promote drainage under the post. The top of the footing should be sloped for water runoff.

The concrete must be below the frost line. Otherwise the post will move when the ground freezes. Be careful not to puncture water, sewer, or gas lines when digging holes for footing.

Set the post in the hole approximately 18" down. Fill the hole with the prepared concrete mix. Prod the mix with a stick while filling to reduce any air pockets. If you want to conceal the concrete, pour it to within a few inches of the top of the hole and cover with soil after the concrete has set. Use a carpenter's level on the sides of the post to ensure that the post is aligned vertically. Periodically check the vertical alignment of the post as the concrete is curing.

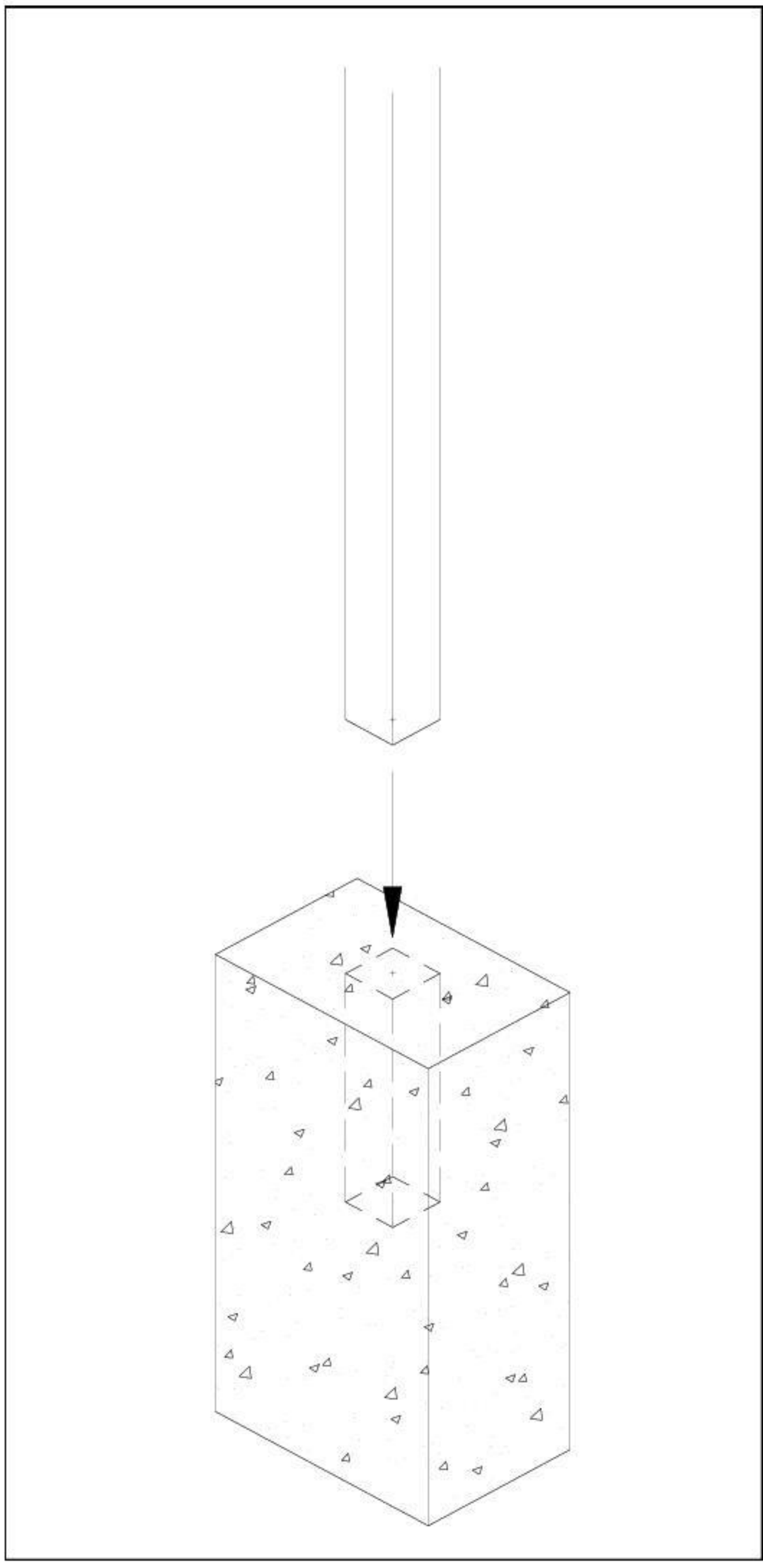

Mail Chests - 4350

Bolt Mount Pedestal Installation Instructions

U.S.P.S. APPROVED

Installing the Bolt Mounted Post on to Anchor Bolts

When you install a curbside mailbox, make sure that it is easily accessible to the mail carrier. By regulation it should be 41" to 45" from the ground or street surface up to the inside floor of the mailbox. The door should be set back 6" to 8" back from the front face of the curb or the road edge. However, you should check with your local postmaster to ensure that the mailbox is installed according to local regulations.

Dig the hole for the concrete footing, and prepare the concrete. You will need approximately 4-1/2 cubic feet. The top surface of the footing should be about 12" by 18" and extend 36" into the ground. See the illustration for the relative position of the rectangular footing to the post and mailbox. The bottom of the hole for the concrete footing should be filled with about 6" of gravel to promote drainage under the post. The top of the footing should be sloped for water runoff.

The concrete must be below the frost line. Otherwise the post will move if the ground freezes. Be careful not to puncture water, sewer, or gas lines when digging holes for footing.

Four (4) 1/2"-13 by 8" long J-shaped anchor bolts and eight (8) 1/2"-13 nuts are provided. Attach the anchor bolts to the base of the post with four (4) nuts under and four (4) nuts over the bottom mounting plate. Pour the concrete into the hole, prodding the mix with a stick while filling to reduce any air pockets. Press the anchor bolts on the bottom of the post into the concrete until the bottom plate is resting on the top surface of the wet concrete. Use a carpenter's level on the sides of the post to ensure that the post is aligned vertically. Periodically check the vertical alignment of the post as the concrete is curing.

The concrete will shrink as it hardens, leaving a space between the anchor and the concrete when it is cured. To prevent this, loosen the top bolt one full turn prior to inserting into the wet concrete. After the anchor is inserted into the wet concrete, place your foot on the top of the threaded anchor and push down until the top nut is pressed against the anchor plate. After the concrete has hardened, re-tighten the top bolt.

