Letter Boxes - Standard – 2240 and 2245
Installation Instructions

Thank you for selecting Salsbury's Standard Letter Boxes. With their rugged all aluminum construction, Salsbury 2240 and 2245 Standard Letter Boxes will provide years of maintenance free service.

Model 2240 Surface Mounted Unit

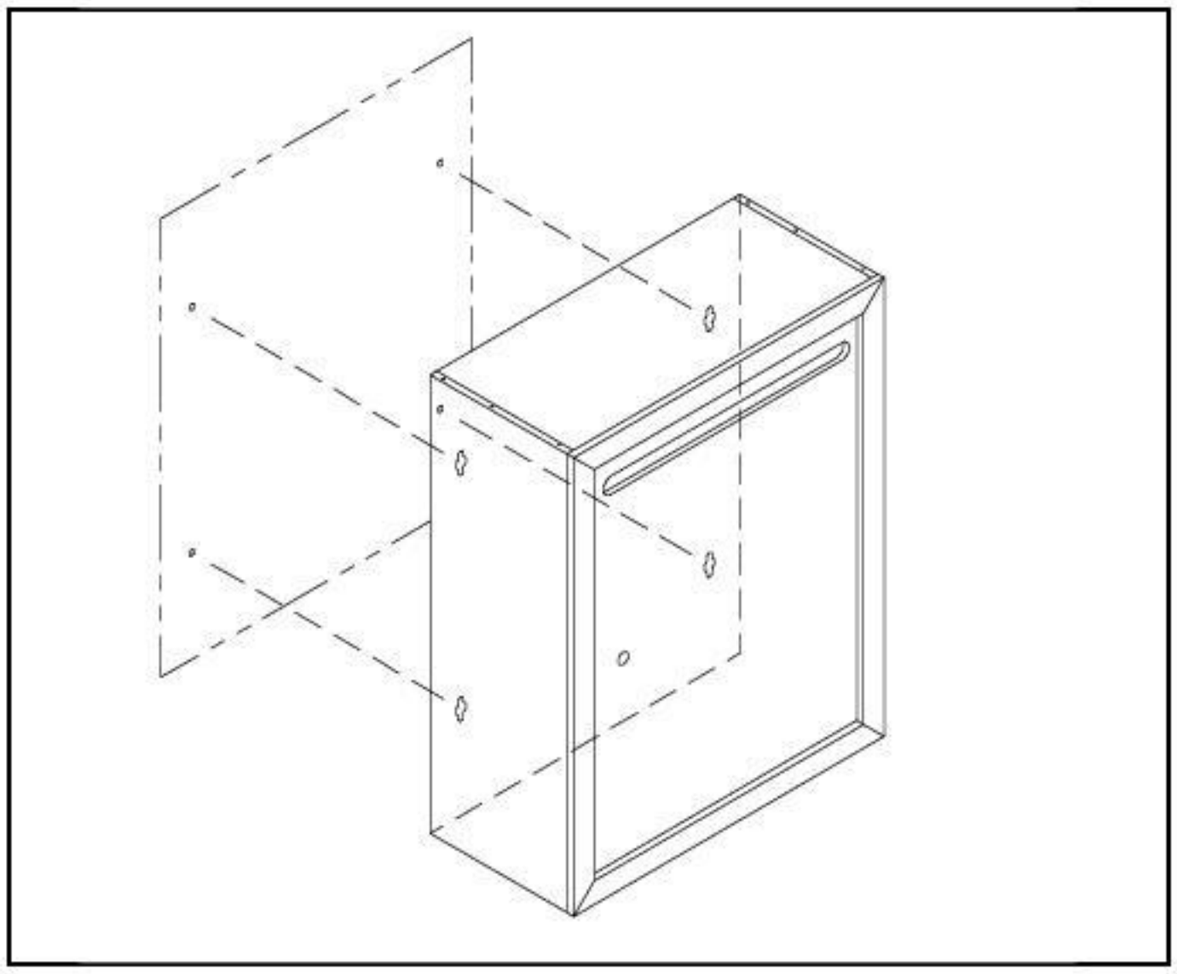

Model 2245 Recessed Mounted Unit

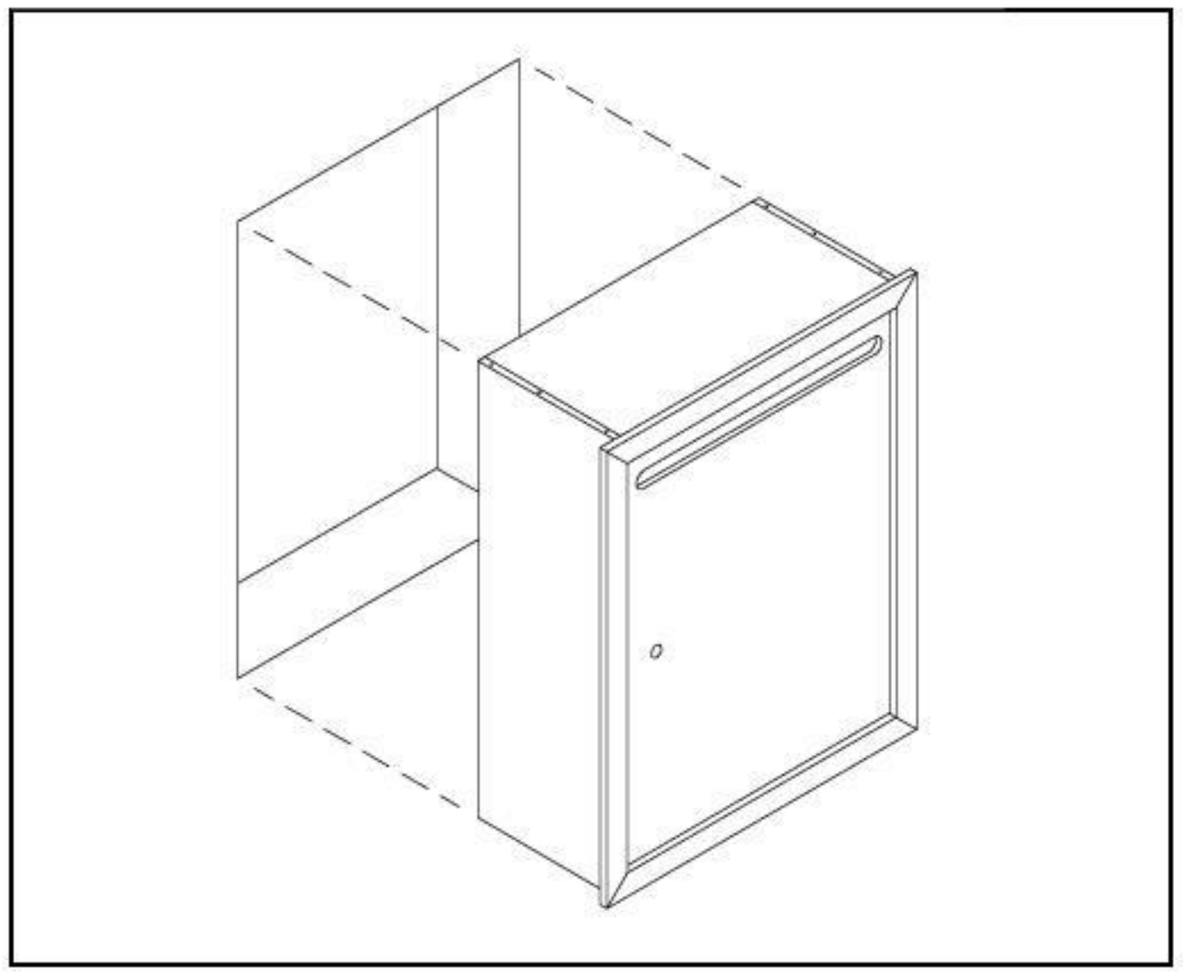

#2240 Overall Dimensions
15"W x 19"H x 7-1/2"D

1. Hold unit up on wall at desired height.
2. Open door and mark wall through the mounting holes provided on back panel.
3. Using appropriate screws and anchors securely fasten unit to the wall. Due to variations in wall materials, mounting hardware is not supplied.

#2245 Overall Dimensions
15"W x 19"H x 6-3/4" D

Note: A 6-3/4" D clearance is required from the front of the wall for the #2245 unit to install properly. If this clearance is not available, please inquire about Salsbury's slim letter box - 2265.

1. Hold unit up on wall at desired height.
2. Mark the unit's location on the wall. Cut out the rough opening in the wall (13-3/4"W x 17-3/4"H x 6-3/4"D).
3. Frame the opening and replace any framing/blocking that has been cut.
4. Place unit in the opening and secure to the framing by drilling screws from the inside of the box through the side of the walls and into the framing.

#2245 Rough Opening Dimensions
13-3/4"W x 17-3/4"H x 6-3/4"D