Letter Boxes - Slim – 2260 and 2265
Installation Instructions

Thank you for selecting Salsbury's Slim Letter Boxes. With their rugged all aluminum construction, Salsbury 2260 and 2265 Slim Letter Boxes will provide years of maintenance free service.

Model 2260 Surface Mounted Unit

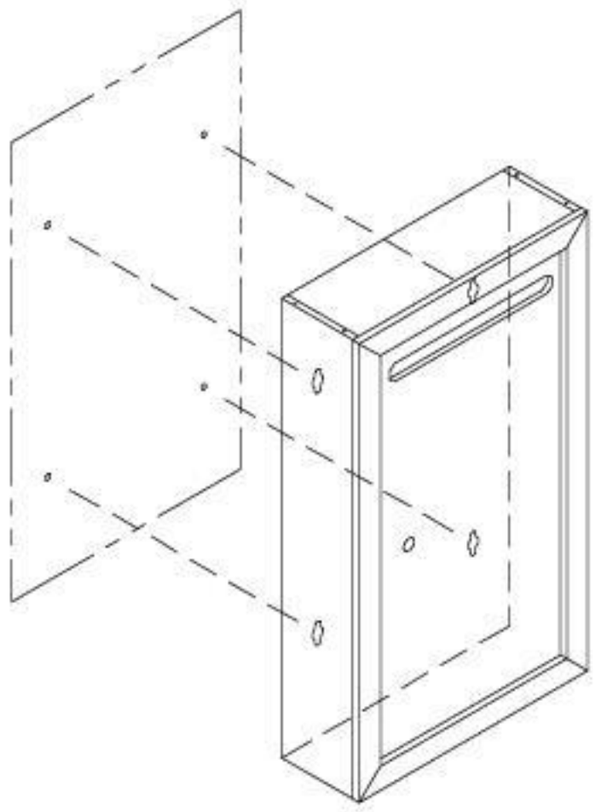

#2260 Overall Dimensions
11"W x 19"H x 3-3/4"D

1. Hold unit up on wall at desired height.
2. Open door and mark wall through the mounting holes provided on back panel.
3. Using appropriate screws and anchors securely fasten unit to the wall. Due to variations in wall materials, mounting hardware is not supplied.

Model 2265 Recessed Mounted Unit

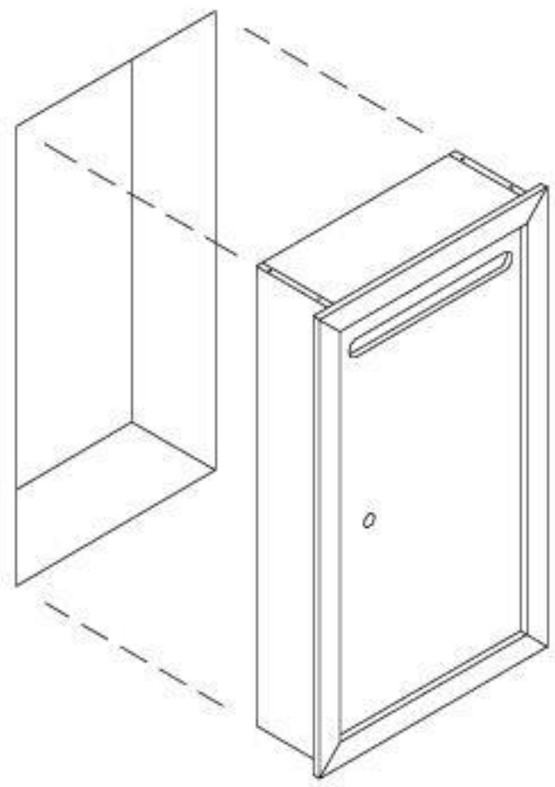

#2265 Overall Dimensions
11"W x 19"H x 3-1/2" D

Note: A 3-1/2" D clearance is required from the front of the wall for the #2265 unit to install properly.

1. Hold unit up on wall at desired height.
2. Mark the unit's location on the wall. Cut out the rough opening in the wall (9-1/2"W x 17-3/4"H x 3-1/2"D).
3. Frame the opening and replace any framing/blocking that has been cut.

Place unit in the opening and secure to the framing by drilling screws from the inside of the box through the side of the walls and into the framing.

Recessed Mounted Rough Opening Dimensions
9-1/2"W x 17-3/4"H x 3-1/2"D