4C Horizontal Mailboxes – 3700 Series
Single Parcel Lockers
FRONT LOADING and REAR LOADING Installation Instructions

IMPORTANT NOTE FOR FRONT LOADING UNITS !

After installing the unit, contact your local postmaster – the USPS will provide and install its own master lock on your mailbox unit. Hardware for installing the master lock is included in the plastic bag.

U.S.P.S. APPROVED

With its high-security design and quality construction, Salsbury's 3700 series USPS approved 4C horizontal mailboxes and parcel lockers will provide years of maintenance free service. **These units meet all the requirements of USPS-STD-4C, the new high-security standard developed by the United States Postal Service.**

Illustration 1 - Typical Installation

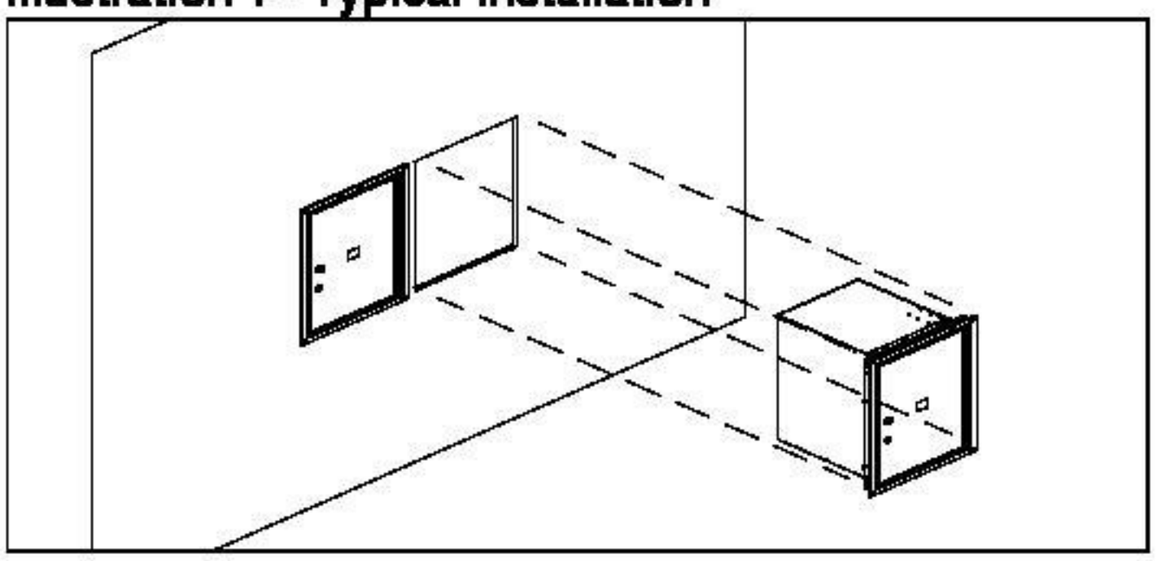

Preparatory Steps

1. Have parcel locker(s) and instructions on hand before starting wall construction to ensure accurate and tight rough openings.
2. Unpack and review contents of shipping cartons.
3. Gather parcel locker keys and store in a secure place.
4. Read installation instructions document thoroughly.
5. Determine rough opening size(s).
6. Determine rough opening location above finished floor.
7. Determine framing configuration and location.
8. Procure materials for wall construction.

Rough Opening Dimensions

Each unit requires a separate opening in the drywall. If there is more than one (1) front loading unit, each pair of units will have a 2x4 stud separating them. See illustration on page 4. If there is more than one (1) rear loading unit, each pair of units will have a 2x4 stud and two (2) 2x2 studs separating them. See illustration on page 5. The trim frames will not be butted together. There will be a space between the edges of the trim frames of approximately ¾" when 2x4 studs with drywall separate the mailboxes. *Inquire at Salsbury for separate instructions for wall framing to enable butting together of trim frames.*

USPS Regulations

The parcel lockers must be installed according to Postal Regulations.

1. The patron lock in the highest parcel locker shall be no more than 67" above the finished floor.
2. The floor of the lowest parcel locker shall be no less than 15" above the finished floor.
3. There must be at least one parcel locker for every ten patron mailboxes in installations of 10 or more patron mailboxes. There is no requirement for parcel lockers in installations of less than 10 patron mailboxes, but one or more parcel lockers are recommended.

Calculation of Space Required for Multiple Units

For overall width of parcel locker installation, add all of the 2x4 stud spacings and subtract ¾". For overall height of units, see the dimension chart below on this page.

WIDTHS	1 COLUMN
Overall	16-3/8"
Rough Opening	15-5/8"
Stud Spacing	17-1/8"

HEIGHTS	PL5	PL6
Overall	20"	23-1/2"
Rough Opening	19-1/4"	22-3/4"

Wall Construction

Particular attention must be paid to wall framing to provide a strong and secure attachment of the parcel lockers units. Stud spacing must be accurate to ensure that there is minimum space between the studs and the parcel locker frame and minimum parcel locker frame distortion when the fasteners are tightened between the frame and the studs. Studs must be installed plumb and square to further ensure proper fit of the mailboxes.

THIS PAGE FOR FRONT LOADING UNITS ONLY.

Parcel Locker Installation

1. Construct wall and parcel locker support structure with drywall, 2x4 lumber, and 3/8" plywood. 2x6 lumber may be used for a stronger wall. See illustration on Page 4.

2. Cut a hole(s) in the wall according to the rough opening dimensions. Each parcel locker unit assembly should have its own opening in the drywall.

3. Open parcel locker door. See illustration below.

Illustration 2 - Door and Trim Frame Location

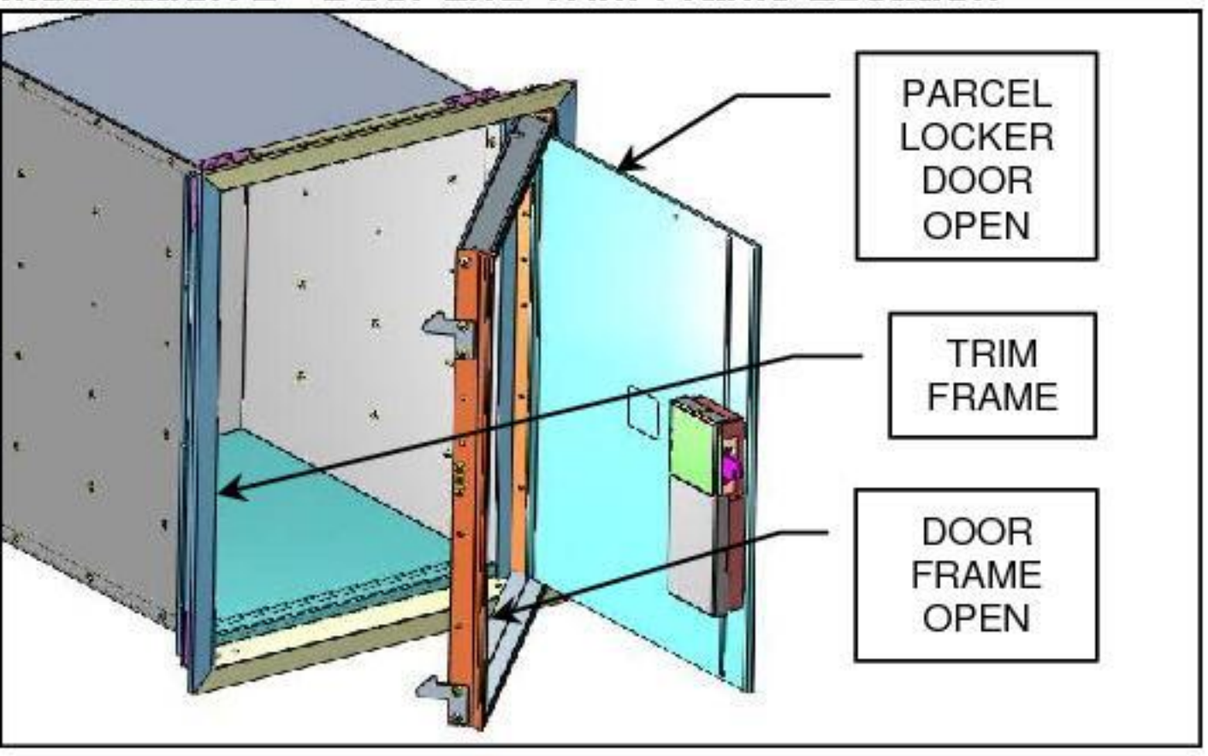

4. Open door frame using lockbar by lifting lockbar screws. See illustration below.

Illustration 3 - Rear View Showing Lockbar Screws

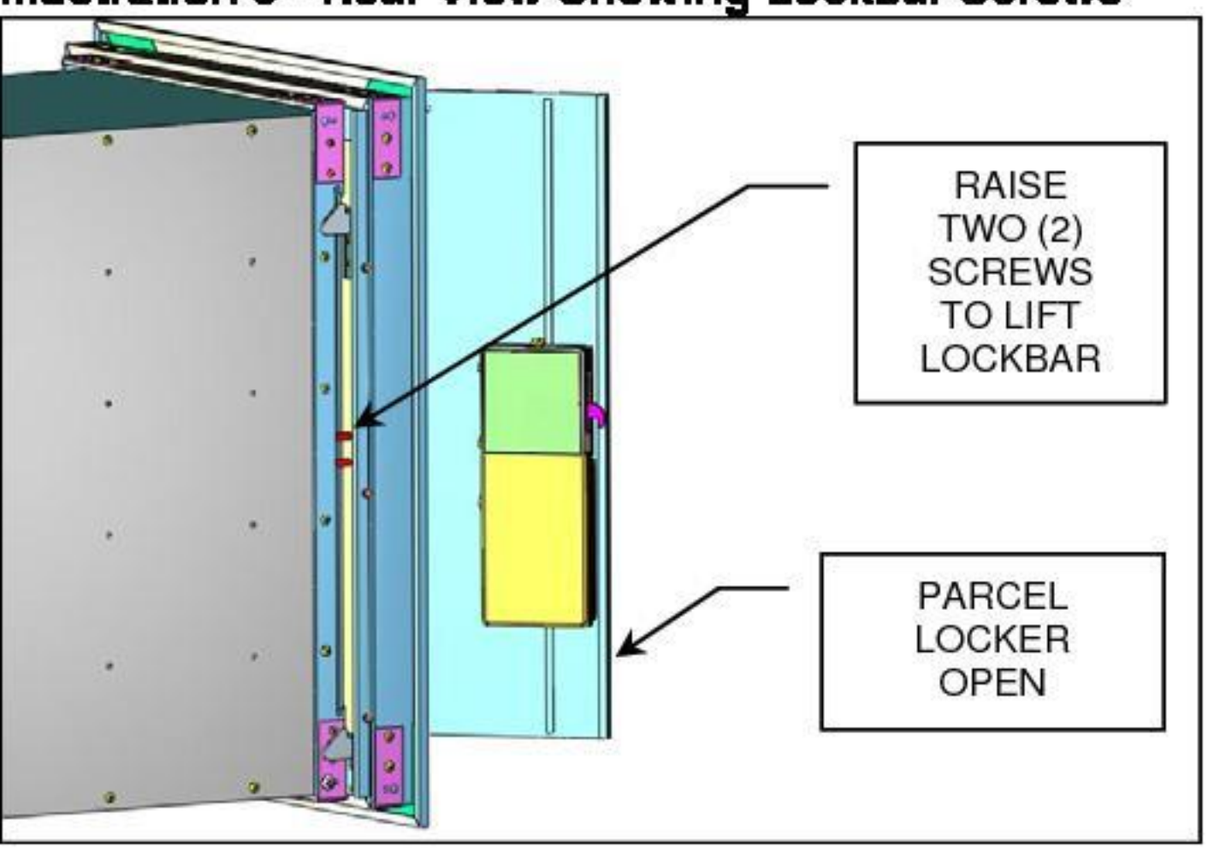

5. Place unit(s) into rough opening(s). Note the mounting hole locations and drill pilot holes into the studs. Securely fasten to the framing with the 4 screws provided. See illustration below. Install all 4 screws into the 2 holes provided in each of the right and left side vertical trim frame members.

Caution: Do not deform, force, or twist the parcel locker frame to fit an incorrect rough opening or against an irregular surface. Do not over-tighten the installation screws. If necessary, shim the small space between the stud and the vertical trim frame member.

6. Close the door frame into the lockbar with sufficient force to lock.

Caution: Once closed, you will not be able to open the door frame.

7. Test each parcel locker door to ensure that it opens and swings freely without binding or sticking.

Illustration 4 - Fastening Mailbox Unit to Framing

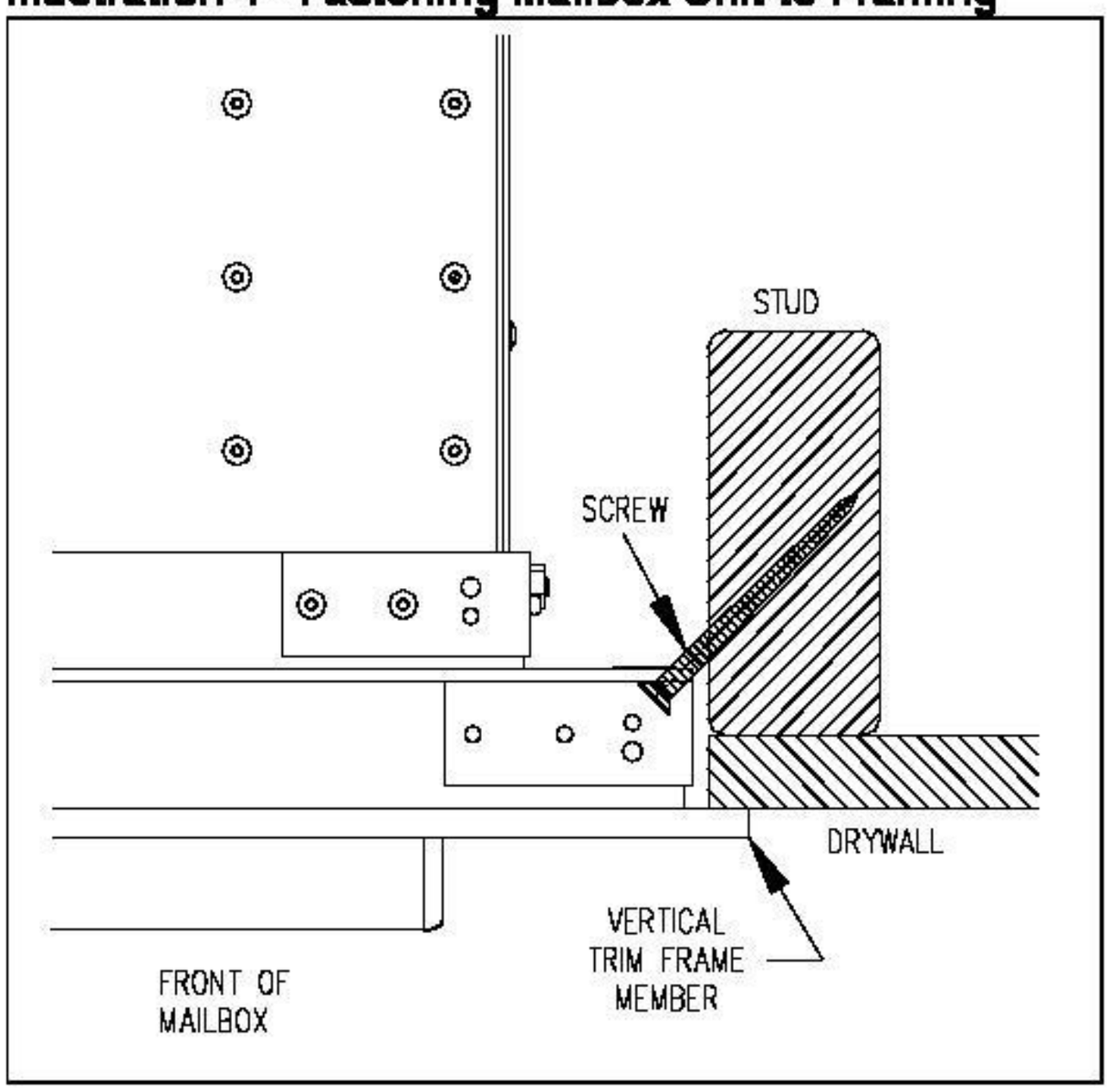

THIS PAGE FOR REAR LOADING UNITS ONLY.

Parcel Locker Installation

1. Construct wall and mailbox support structure with drywall, 2x2 lumber, 2x4 lumber, and 3/8" plywood. 2x6 lumber may be used in place of 2x4 lumber for a stronger wall. See illustration on Page 5.

2. Secure the 2 pieces of 2x2 lumber to the wall frame with 16d penny (3-1/2" long) nails. Space each nail no more than 8" apart, with the top and bottom nails three (3) inches from each end of the 2x2 lumber.

3. Cut a hole(s) in the wall according to the rough opening dimensions. Each mailbox unit assembly should have its own opening in the drywall.

4. Place unit(s) into rough opening(s).

5. Open the parcel door to gain access to the mounting hardware holes. See illustration 5 on this page. Note the mounting hole locations and drill pilot holes into the studs. The holes are approximately 2" in from the front face of the vertical trim frame members. See illustration 6 on this page. Securely fasten to the support framing with the #8x2" pan-head torx screws provided. Install all 4 screws into the 2 holes provided in each of the right and left side vertical trim frame members.

Caution: Do not deform, force, or twist the frame to fit an incorrect rough opening or against an irregular surface. Do not over-tighten the installation screws. If necessary, shim the small space between the stud and the vertical, extruded-aluminum trim frame.

6. Test the parcel locker door to ensure that it opens and swings freely without binding or sticking.

Illustration 5 - Location of Mounting Hardware Holes



Illustration 6 - Fastening Mailbox Unit to Framing

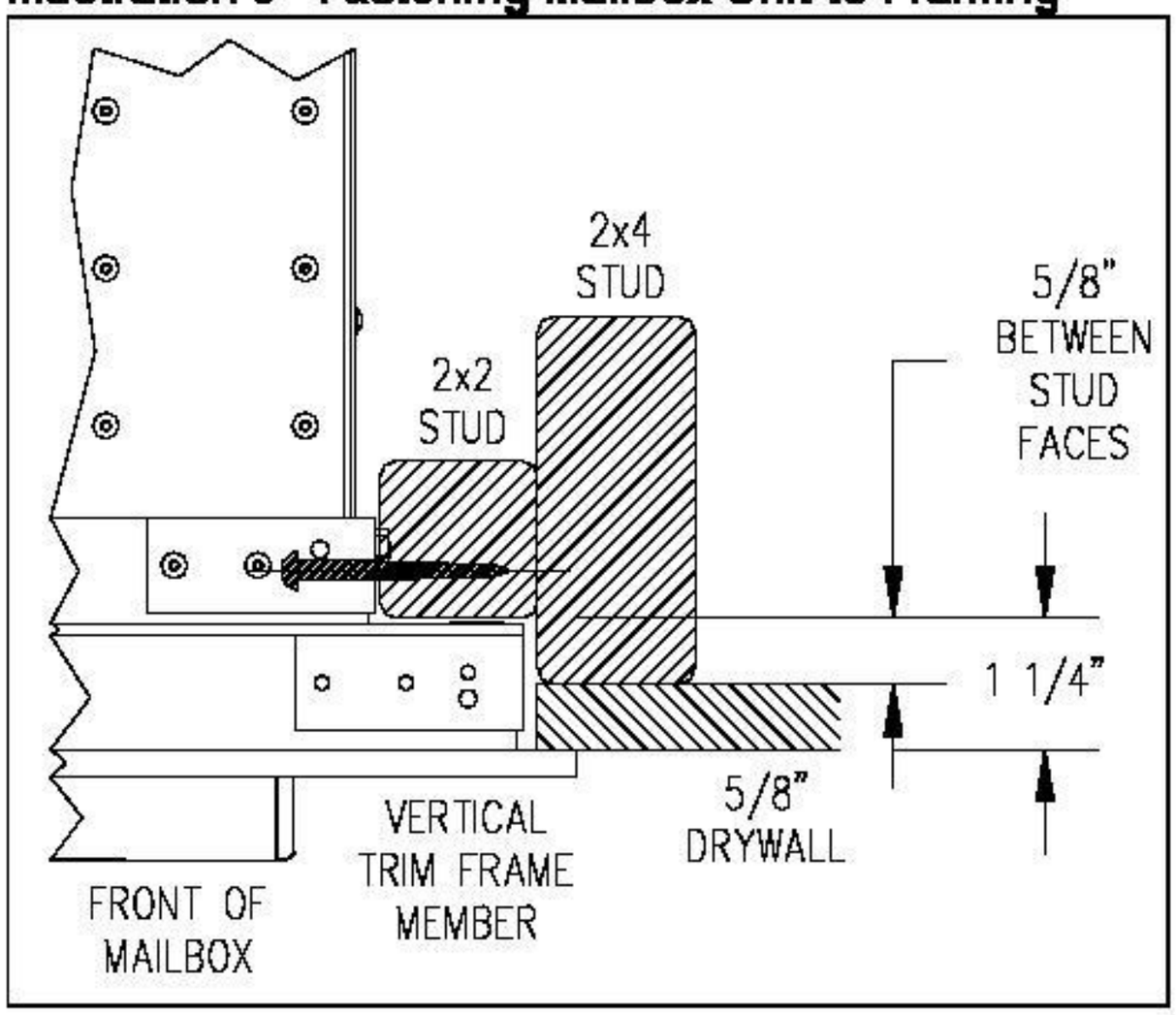

Illustration 7 - Wall Framing Recommendation for Front Loading Units Only

FRONT LOADING UNIT
WIDTH DIMENSIONS ARE FOR 1-COLUMN UNIT

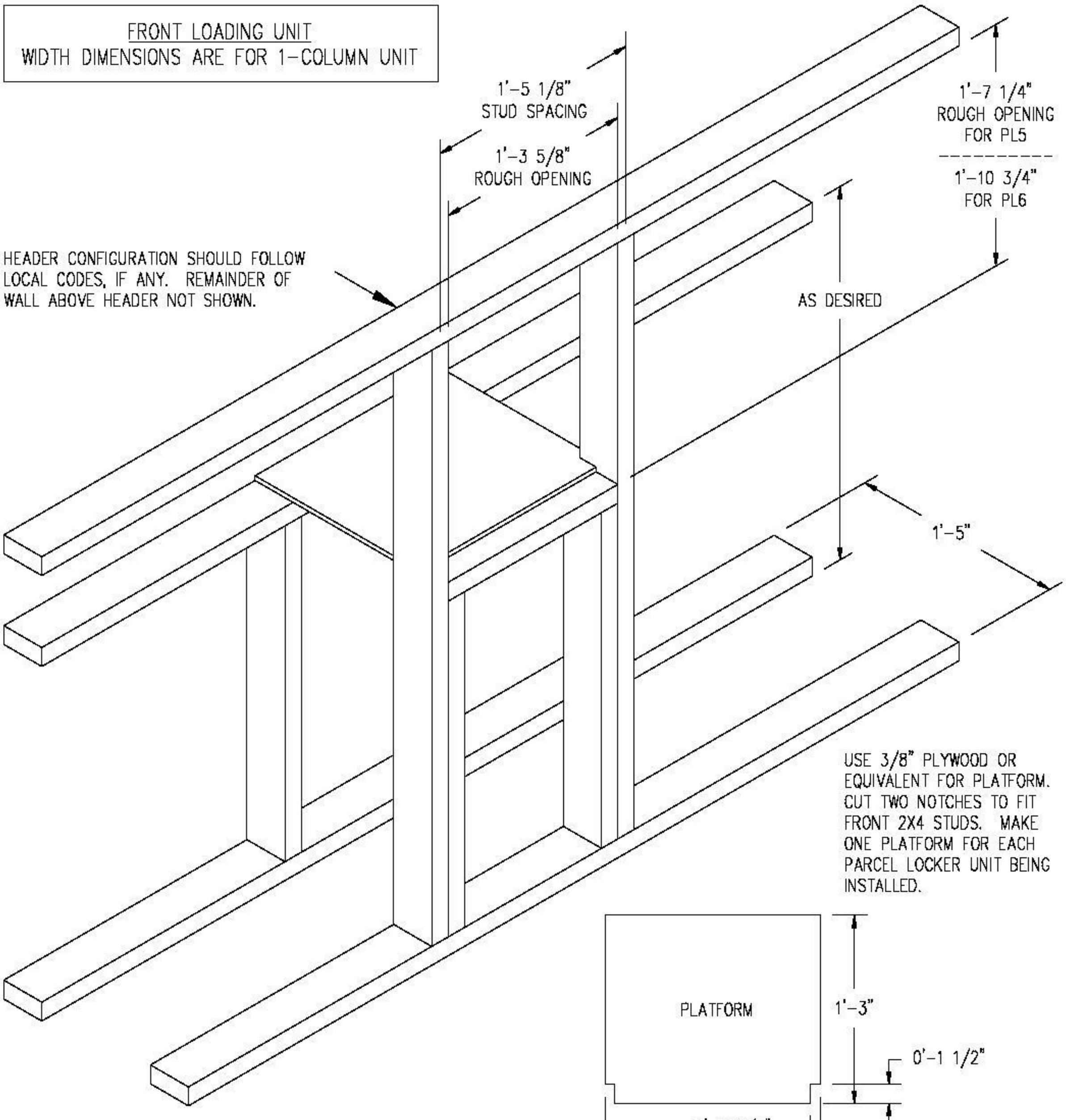

HEADER CONFIGURATION SHOULD FOLLOW LOCAL CODES, IF ANY. REMAINDER OF WALL ABOVE HEADER NOT SHOWN.

USE 3/8" PLYWOOD OR EQUIVALENT FOR PLATFORM. CUT TWO NOTCHES TO FIT FRONT 2X4 STUDS. MAKE ONE PLATFORM FOR EACH PARCEL LOCKER UNIT BEING INSTALLED.

Illustration 8 - Wall Framing Recommendation for Rear Loading Units Only

REAR LOADING UNIT
WIDTH DIMENSIONS ARE FOR 1–COLUMN UNIT

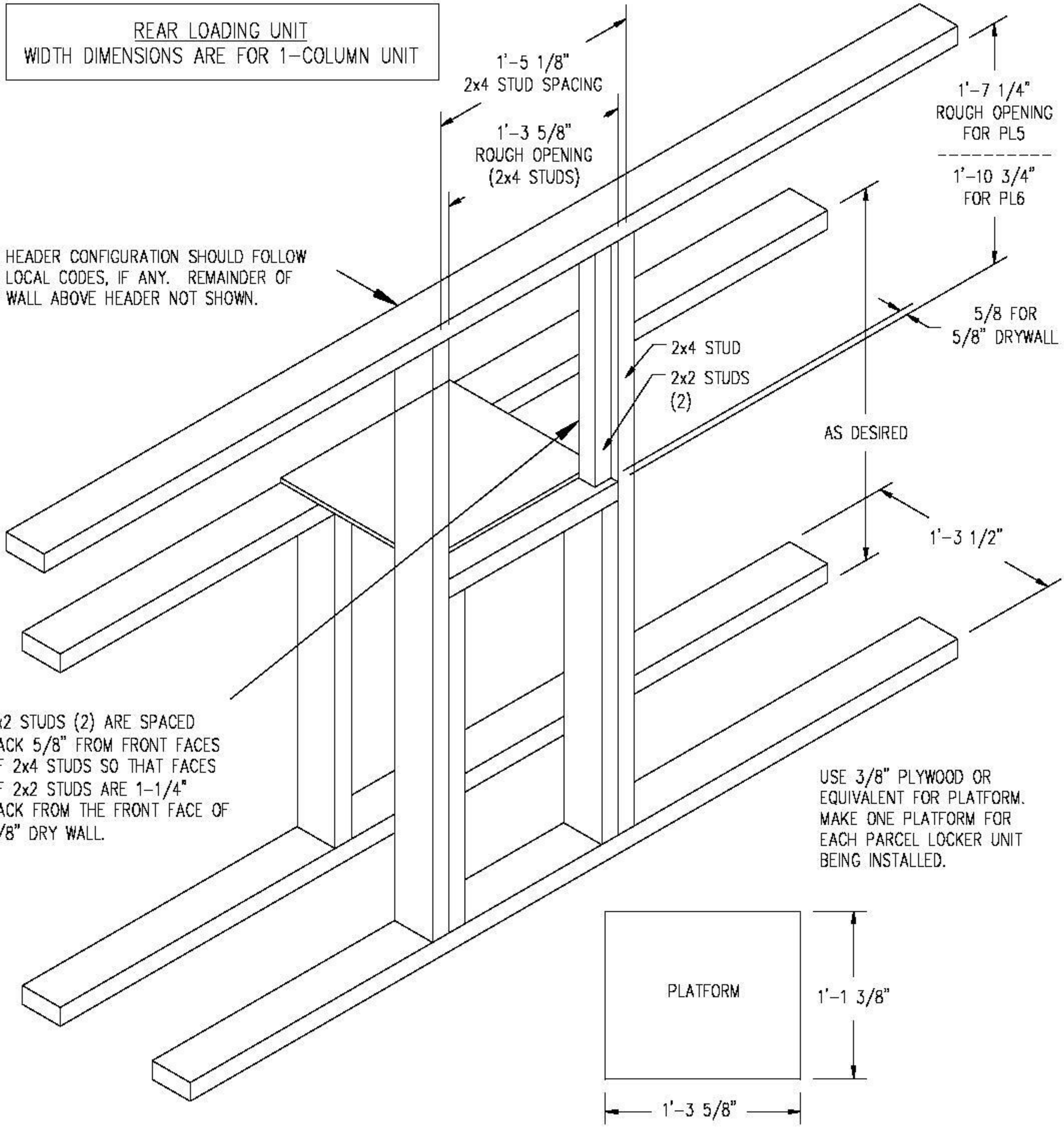

HEADER CONFIGURATION SHOULD FOLLOW LOCAL CODES, IF ANY. REMAINDER OF WALL ABOVE HEADER NOT SHOWN.

2x2 STUDS (2) ARE SPACED BACK 5/8" FROM FRONT FACES OF 2x4 STUDS SO THAT FACES OF 2x2 STUDS ARE 1–1/4" BACK FROM THE FRONT FACE OF 5/8" DRY WALL.

USE 3/8" PLYWOOD OR EQUIVALENT FOR PLATFORM. MAKE ONE PLATFORM FOR EACH PARCEL LOCKER UNIT BEING INSTALLED.