4C Horizontal Mailboxes – 3700 Series

REAR LOADING Installation Instructions

U.S.P.S. APPROVED

With its high-security design and quality construction, Salsbury's 3700 series USPS approved 4C horizontal mailboxes will provide years of maintenance free service. **These units meet all the requirements of USPS-STD-4C, the new high-security standard developed by the United States Postal Service.**

Illustration 1 - Typical Installation

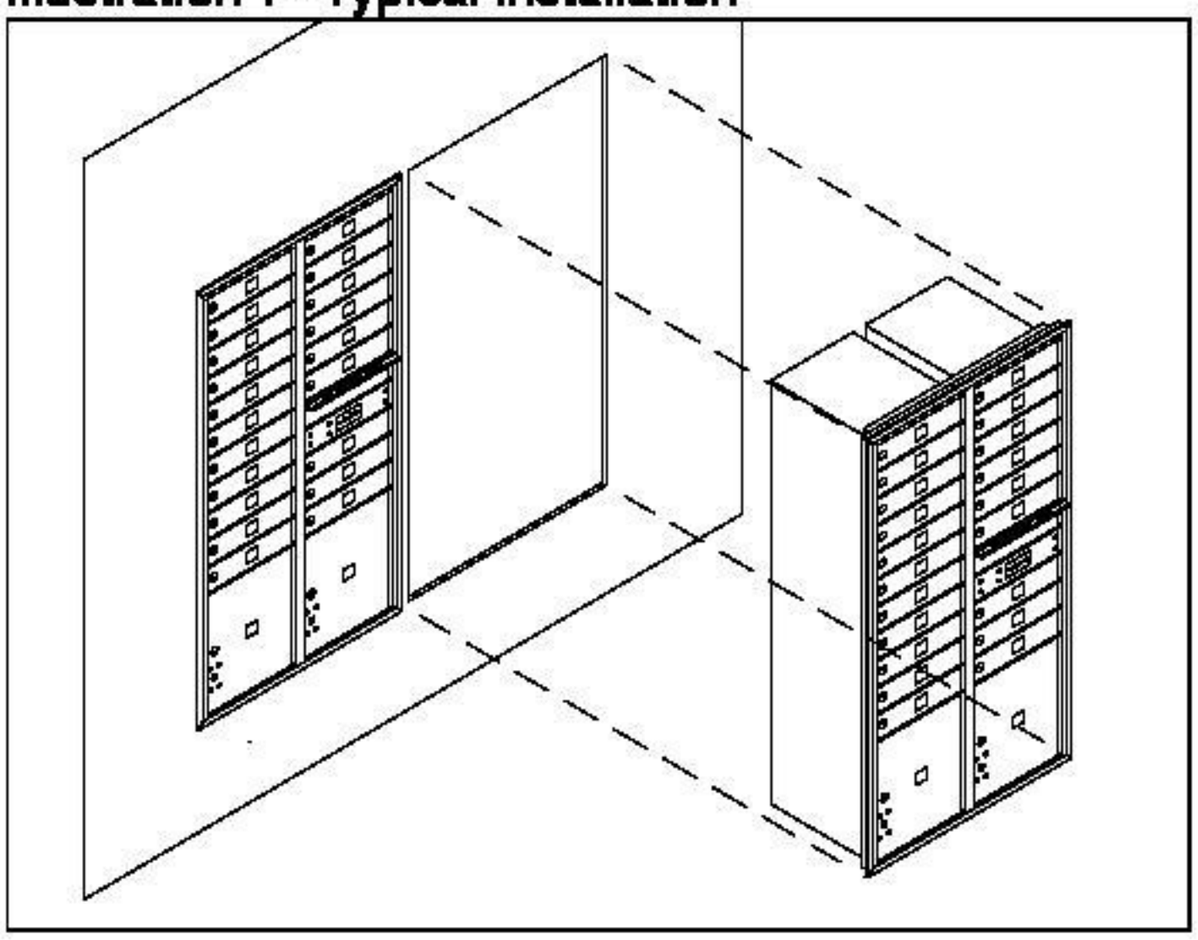

Preparatory Steps

1. Have mailboxes and instructions on hand before starting wall construction.
2. Unpack and review contents of shipping cartons.
3. Gather tenant and parcel locker keys and store in a secure place.
4. Read installation instructions document thoroughly.
5. Determine rough opening size(s).
6. Determine rough opening location above finished floor.
7. Determine framing configuration and location.
8. Procure materials for wall construction.

Rough Opening Dimensions

Each unit requires a separate opening. Each pair of units will have a 2x4 stud and (2) 2x2 studs separating them. The trim frames cannot be butted together. There will be a space between edges of trim frames of approximately ¾".

Calculation Of Space Required for Multiple Units

For overall width of the installation, add all of the stud spacings and subtract ¾". For overall height of units, see chart in next column.

Wall Construction

Particular attention must be paid to wall framing to provide a strong and secure attachment of the mailbox units. Stud spacing must be accurate to ensure that there is minimum space between the studs and the mailbox frame and minimum mailbox frame distortion when the fasteners are tightened between the frame and the studs. Studs must be installed plumb and square to further ensure proper fit of the mailboxes.

Dimensions – REAR LOADING

WIDTHS	1 COLUMN	2 COLUMN
Overall	16-3/8"	31-1/8"
Rough Opening	15-5/8"	30-3/8"
Stud Spacing	17-1/8"	31-7/8"

HEIGHTS	OVERALL	ROUGH OPENING
Maximum Height	56-3/4"	56"
15 Doors High	55"	54-1/4"
13 Doors High	48"	47-1/4"
11 Doors High	41"	40-1/4"
9 Doors High	34"	33-1/4"
7 Doors High	27"	26-1/4"
5 Doors High	20"	19-1/4"
3 Doors High	13"	12-1/4"

Notes

1. Although these mailboxes have been tested and approved for both outdoor and indoor use, some shelter from direct weather conditions should be provided, especially in areas with heavy rainfall. This provides protection for the mail, the delivery personnel, and the mail patrons.
2. The mailboxes are shipped fully assembled.
3. Hardware is included to fasten each unit into a wood framed wall.
4. Trim is an integral part of the mailbox assembly. There is no other snap-on trim to install.

USPS Regulations

The mailboxes must be installed according to Postal Regulations. See illustration 4 on page 3.

1. The floor of the lowest patron mailbox shall be no less than 28" above the finished floor.

2. The patron lock in the highest mailbox shall be no more than 67" above the finished floor.

3. The floor of the lowest parcel locker shall be no less than 15" above the finished floor.

4. The rear access door(s) must be allowed to open a minimum of 90 degrees with no obstruction.

5. There must be at least one parcel locker for every ten patron mailboxes in installations of 10 or more patron mailboxes. There is no requirement for parcel lockers in installations of less than 10 patron mailboxes, but one or more parcel lockers are recommended.

Installation Instructions

1. Construct wall and mailbox support structure with drywall, 2x2 lumber, 2x4 lumber, and 3/8" plywood. 2x6 lumber may be used in place of 2x4 lumber for a stronger wall. See illustration 5 on Page 4.

2. Secure the 2x2 lumber to the wall frame with 16d penny (3-1/2" long) nails. Space each nail no more than 8" apart, with the top and bottom nails three (3) inches from each end of the 2x2 lumber.

3. Cut a hole(s) in the wall according to the rough opening dimensions. Each mailbox unit assembly should have its own opening in the drywall.

4. Place unit(s) into rough opening(s).

5. Open the several installation access doors to gain access to the mounting hardware holes. See illustration on page 3. The compartments with access to the mounting hardware holes are located in the top and bottom compartments on the left and right side and in every third compartment down. Note the mounting hole locations and drill pilot holes into the studs. The holes are approximately 2" in from the front face of the vertical trim frame members. See illustration 3 on this page. Securely fasten to the support framing with the #8x2" pan-head torx screws provided. See illustrations 2 & 3 on this page. Install screws into all holes provided in both right and left side vertical trim frame members. **Caution: Do not deform, force, or twist the frame to fit an incorrect rough opening or against an irregular surface. Do not over-tighten the installation screws. If necessary, shim the small space between the stud and the vertical, extruded-aluminum trim frame.**

6. Test all patron doors and parcel locker doors to ensure that they open and swing freely without binding or sticking.

Illustration 2 - Fastening Mailbox Unit to Framing

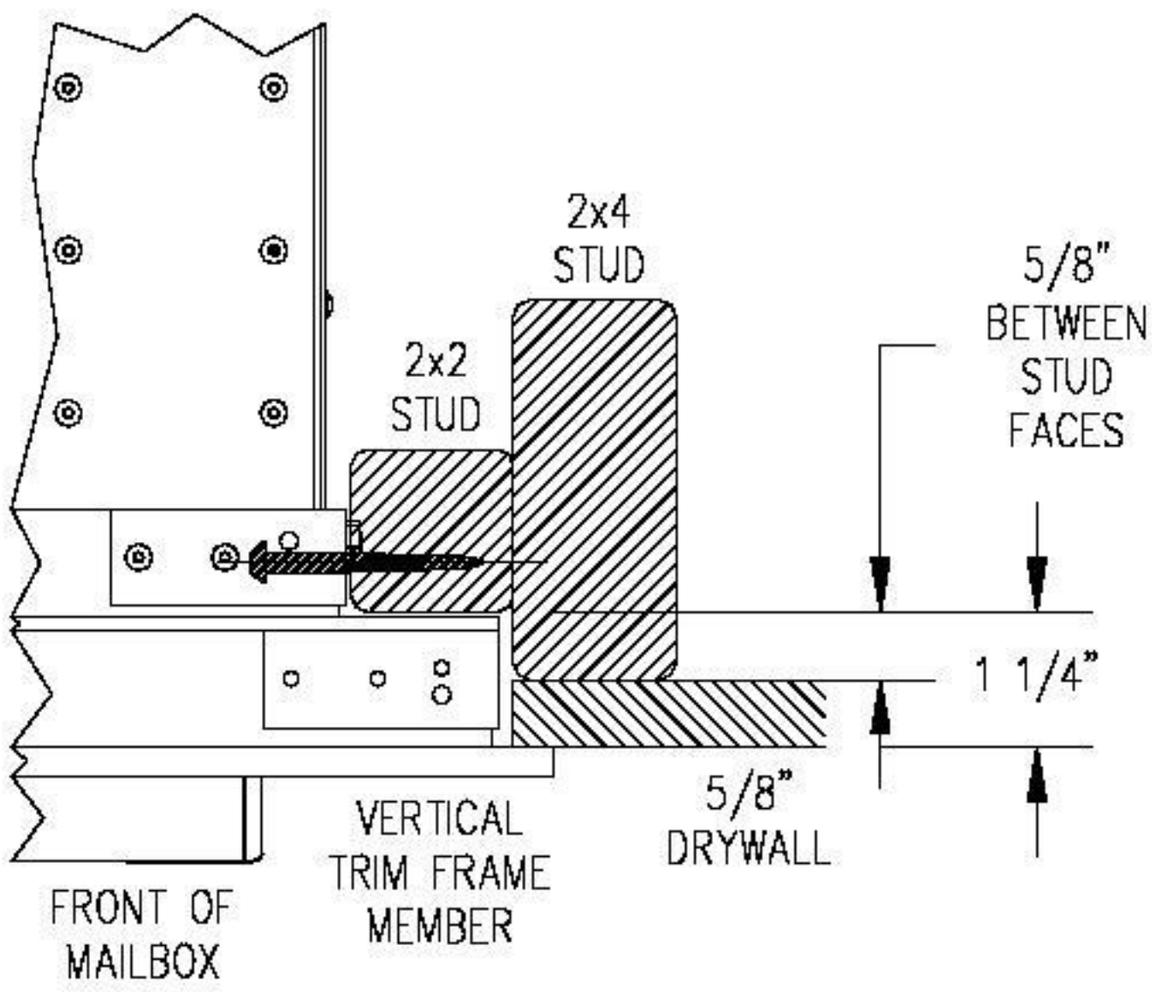

Illustration 3 - Location of Mounting Hardware Hole



Illustration 4 - USPS Height Regulations

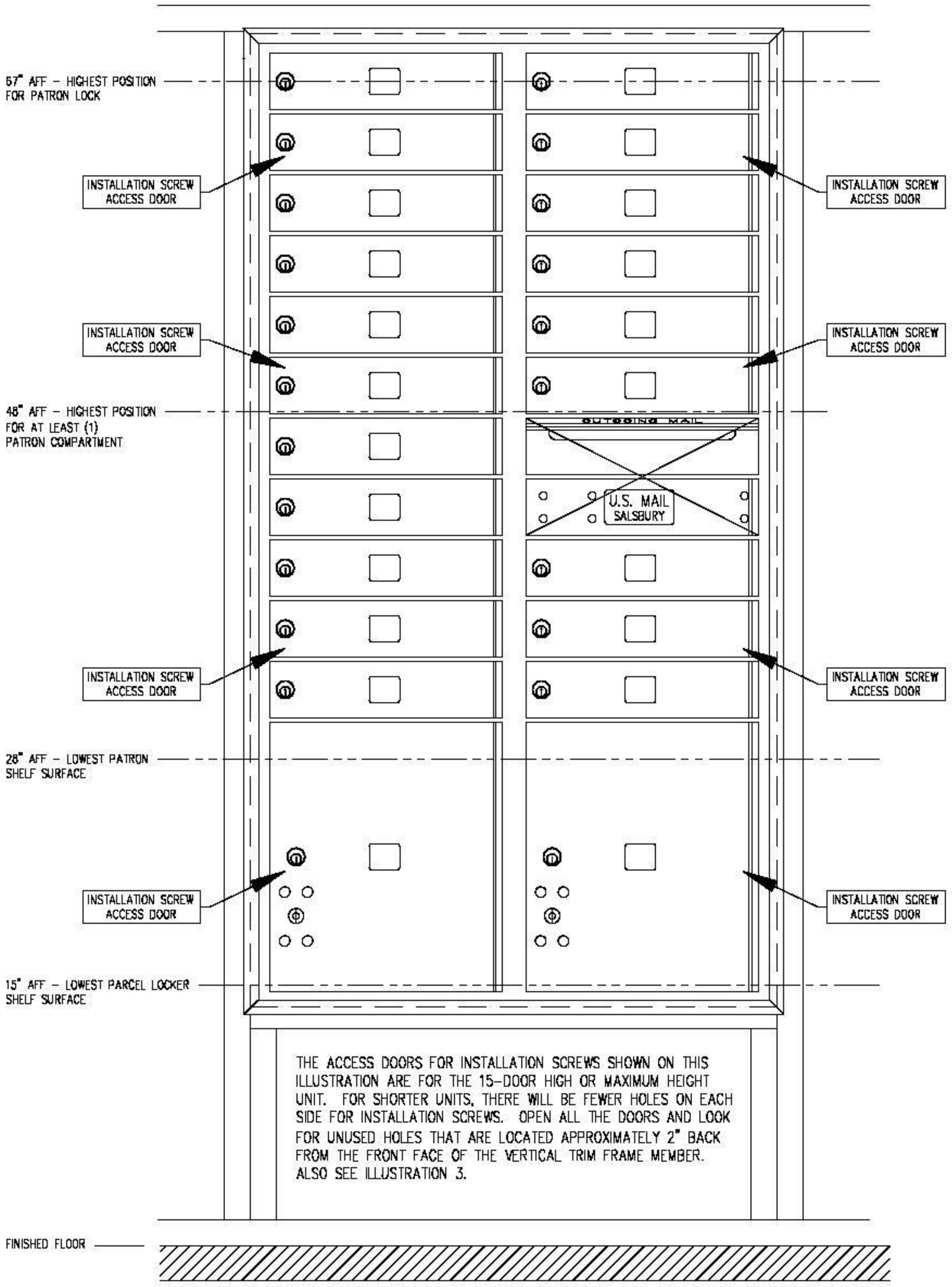

Illustration 5 - Wall Framing Recommendation

WIDTH DIMENSIONS ARE FOR 2-COLUMN UNIT.
SUBTRACT 14-3/4" FOR 1-COLUMN UNIT.

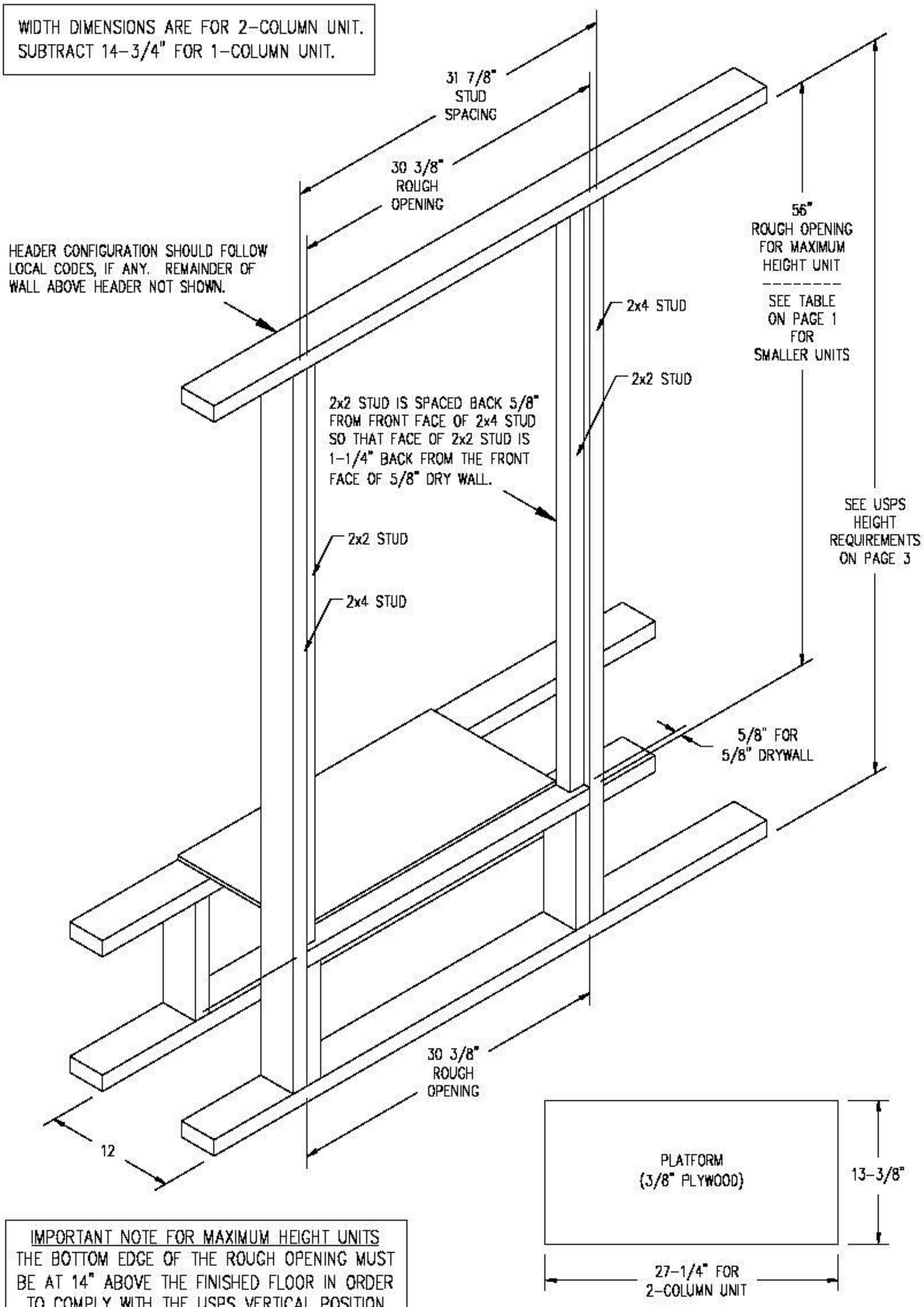

IMPORTANT NOTE FOR MAXIMUM HEIGHT UNITS
THE BOTTOM EDGE OF THE ROUGH OPENING MUST BE AT 14" ABOVE THE FINISHED FLOOR IN ORDER TO COMPLY WITH THE USPS VERTICAL POSITION REQUIREMENTS SHOWN ON PAGE 3.